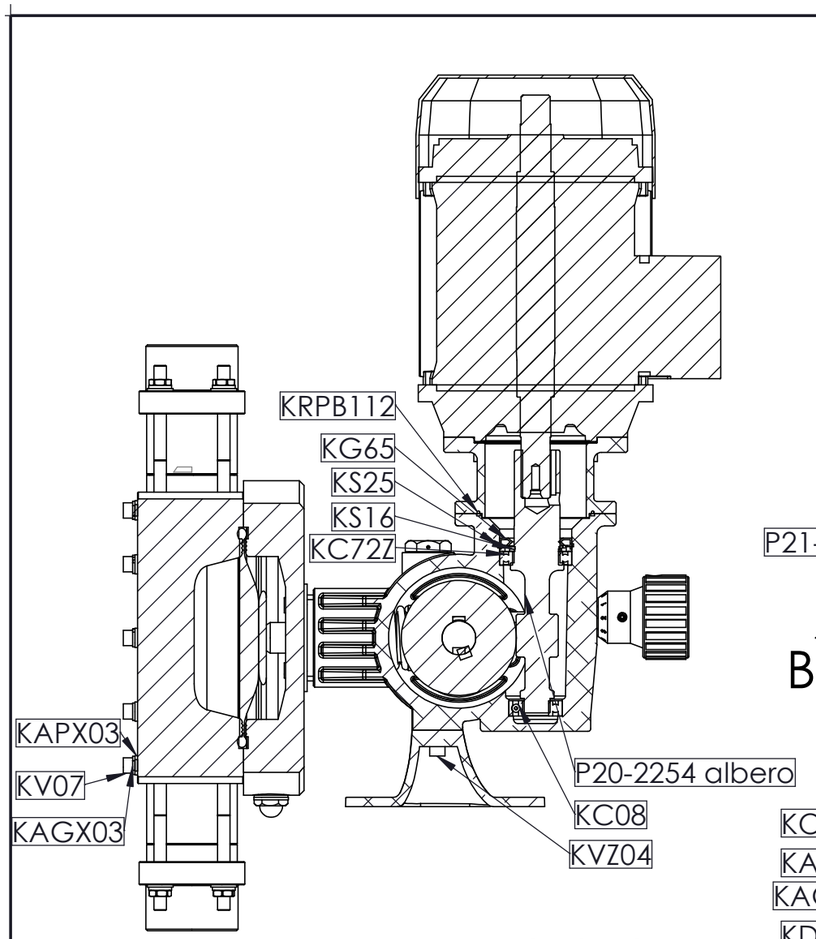

SECTION C-C

SCALE 1 : 4

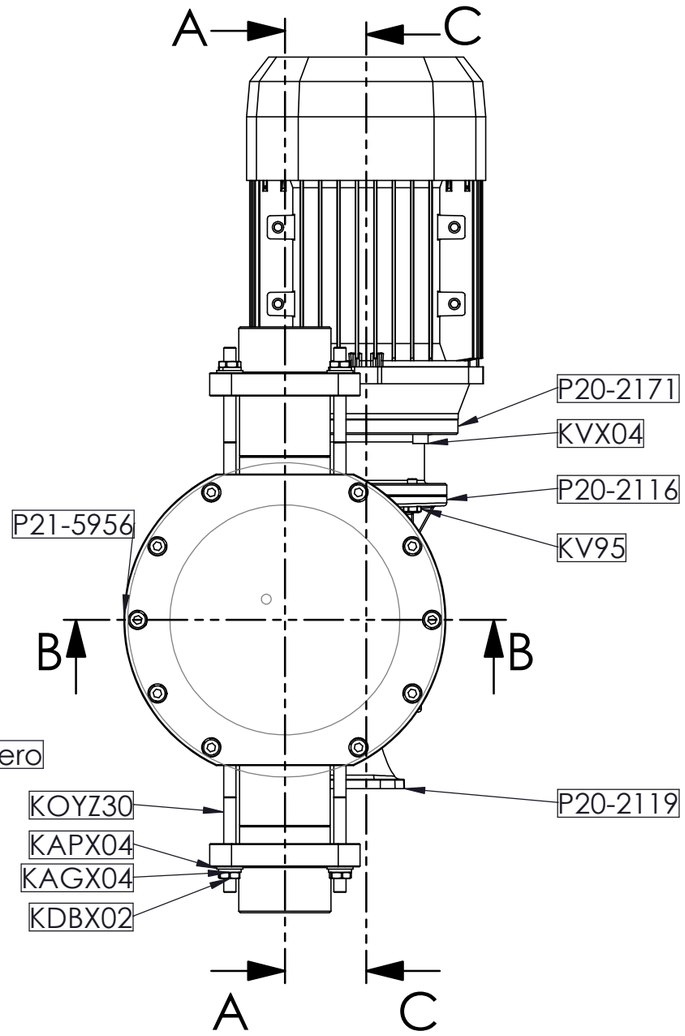

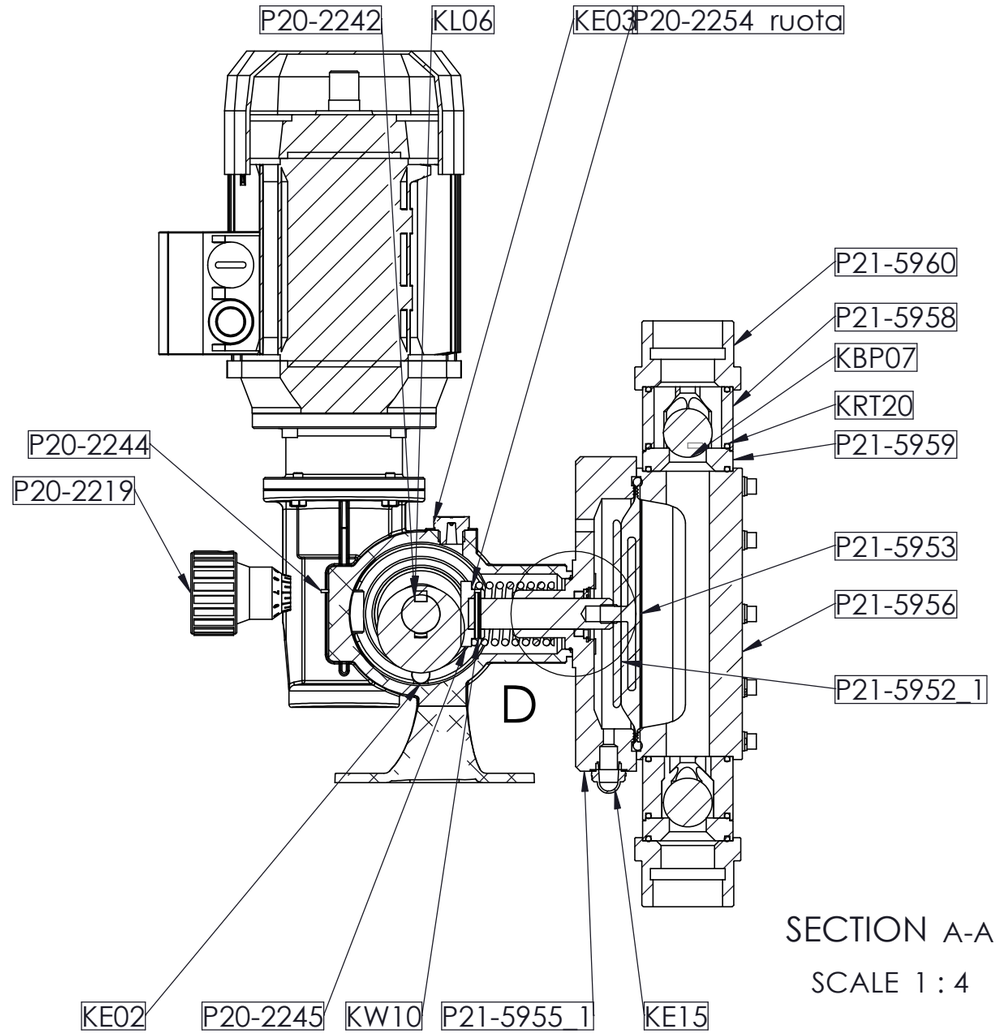

SECTION A-A

SCALE 1 : 4

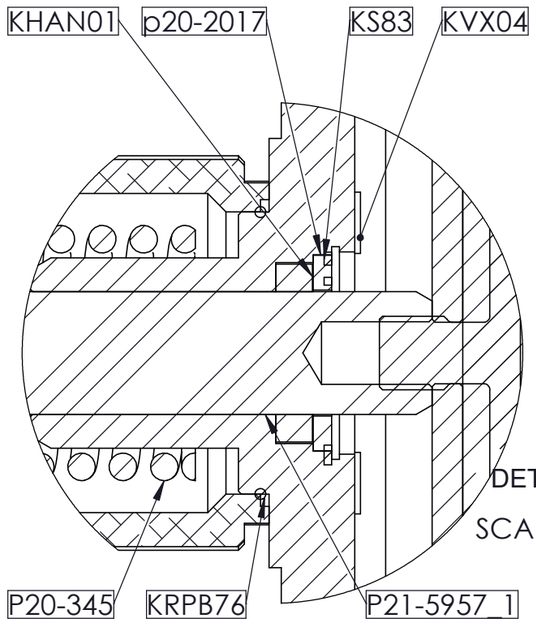

DETAIL D

SCALE 1 : 1

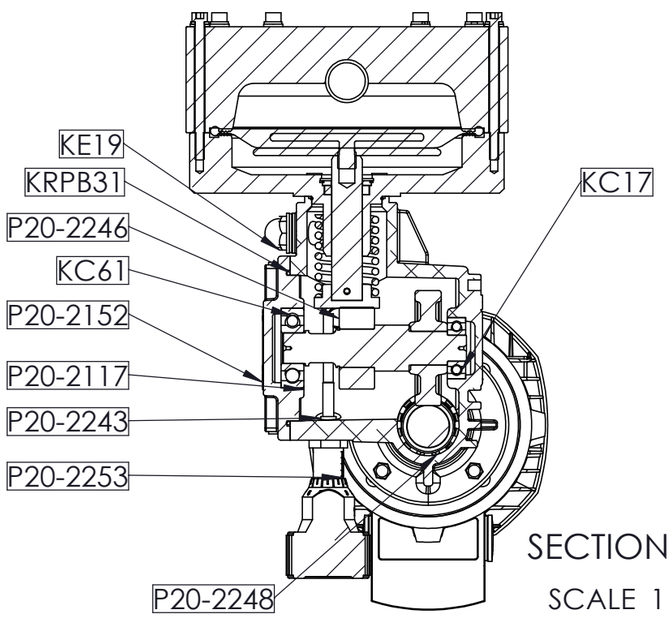

SECTION B-B

SCALE 1 : 4

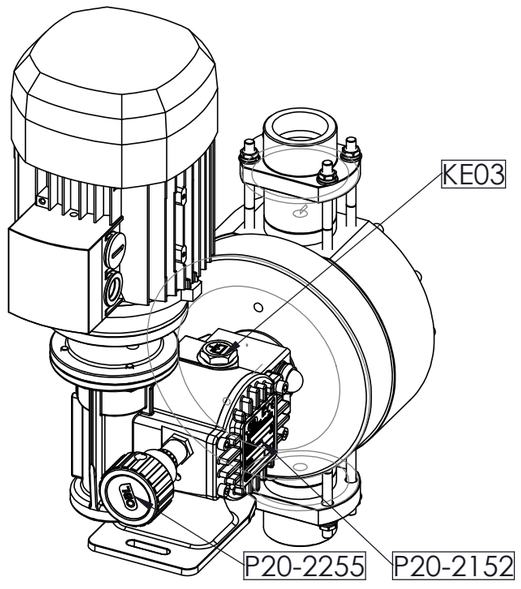

SCALA / SCALE:

1:4

GENERAL NOTES:

- ASTM code for rubber or plastic part not applicable
- UNI code for parts will be indicated if ASTM designation is not available
- For sub-assembly the indicated material is the one of main components;

BLACKLINE 2.0

M810/1070/1260/1500PPSV
M960/1140/1350PPSV

REVISIONE / REVISION:	DATA / DATE:
0	30.09.2020

OBL srl, proprietaria del presente documento si riserva di tutelare i propri diritti qualora, senza autorizzazione scritta, esso venga riprodotto, consegnato a terzi o comunque utilizzato per costruire l'oggetto rappresentato.
PROPRIETARY DATA: This document discloses information and data in which OBL has proprietary rights. The right to reproduce, use or disclose in whole or in part except by written permission is prohibited.

CODE	DESCRIPTION	MATERIAL	QTY	SPARE PART KIT
KAGX03	rondella - washer - D.6 mm	ASTM A193 Gr.B8	10	
KAGX04	rondella - washer - D.8 mm	ASTM A193 Gr.B8	8	
KAPX03	rondella - washer - D.6 mm	ASTM A193 Gr.B8	10	
KAPX04	rondella - washer - D.8 mm	ASTM A193 Gr.B8	8	
KBP07	sfera - ball	PIREX	2	KKL-VP24-PP-SV
KC08	cuscinetto - bearing - size 6003	----	1	
KC17	cuscinetto - bearing - size 6203	----	1	
KC61	cuscinetto - bearing - size 6304	----	1	
KC72Z	cuscinetto - bearing - size 61906 2RS	---	1	
KDBX02	dado - nut - M8	ASTM A194 Gr.B8	8	
KE02	tappo - plug	PLASTIC	1	
KE03	tappo - plug	PP	1	
KE15	spia visiva - sight glass	PIREX	1	
KE19	spia olio - sight glass	PLASTIC	1	
KFX91431	grano - dowel	ASTM A194 Gr.B8	1	KIT REG-M-20-MAN
KG65	guarnizione - gasket	NBR	1	
KHAN01	guarnizione - gasket	PTFE	1	KHAN01-2
KL06	linguetta - key shaft	ASTM A.1076 Gr.1040	2	
KOYZ30	prigioniero - stud bolt - M8x80 mm	ASTM A193 Gr.B7	8	
KRPB112	guarnizione OR - OR gasket	NBR	1	
KRPB28	guarnizione OR - OR gasket	NBR	1	
KRPB31	guarnizione OR - OR gasket	NBR	1	
KRPB76	guarnizione OR - OR gasket	NBR	1	
KRPB78	guarnizione OR - OR gasket	NBR	1	KIT REG-M-20-MAN
KRT20	guarnizione OR - OR gasket	NBR	6	KKL-VP24-PP-SV
KRW90	guarnizione OR - OR gasket	NBR	1	KIT REG-M-20-MAN
KS16	anello seeger - seeger ring - A30x1.2V	ASTM A228 Type Harmonic Steel	1	
KS25	anello Seeger - Seeger ring - J47 x v1.75	ASTM A228 Type Harmonic Steel	1	
KS83	anello Seeger - Seeger ring - J33 x v1.2	ASTM A228 Type Harmonic Steel	1	
KV07	vite - screw M6x90mm	ASTM A193 Gr.B8	10	
KV95	vite - screw M6x18mm	ASTM A193 Gr.B8	4	

CODE	DESCRIPTION	MATERIAL	QTY	SPARE PART KIT
KVX04	vite - screw M6x18mm	ASTM A193 Gr.B8	12	
KVZ04	vite - screw M6x18mm	ASTM A193 Gr.B7	2	
KW10	spina - elastic pin	ASTM A194 Gr.B7	1	
P20-1383	etichetta - label	---	1	
P20-1927	etichetta - label	---	1	
P20-2074	etichetta - label	---	1	
P20-2116	corpo pompa - pump casing	Alluminio (G Al Si 12)	1	
P20-2117	coperchio laterale - side cover	A383 (ADC12)	1	
P20-2119	basamento - baseplate	ERGAL	1	
P20-2152	targhetta - nameplate	---	1	KIT REG-M-20-MAN
P20-2171	flangia motore - motor flange	ERGAL	1	
P20-2221	manopola - adjustment knob	PP + ASTM A276 Gr.316L	1	KIT REG-M-20-MAN
P20-2242	albero - shaft	1.7225 (42CrMo4)	1	
P20-2243	asta regolazione - adjustment rod	C45	1	KIT REG-M-20-MAN
P20-2244	guida asta regolazione - adjustment rod guide	AVP	1	KIT REG-M-20-MAN
P20-2245	disco reggispinta - thrust disc	C45	1	
P20-2246	eccentrico - eccentric	1.7225 (42CrMo4)	1	
P20-2248	distanziale - spacer	C40	1	
P20-2253	etichetta - label	---	1	
P20-2254 ruota	ruota - wheel	Bronzo	1	*
P20-2254 albero	vite senza fine - endless screw	36CrNiMo4	1	*
P20-2255	etichetta - label	---	1	
P20-345	molla - spring	Harmonic Steel	1	P20-345-B02
P21-5952_1	scudo - shield	ASTM A276 Gr.316L	1	KIT D.178
P21-5953_1	membrana - diaphragm	NBR+PTFE+C40	1	KIT D.178
P21-5955_1	camera - chamber	Alluminio	1	
P21-5956	corpo testa - head body	PP	1	
P21-5957_1	slitta - slide	C40	1	P21-5957-B02
P21-5958	guida valvola - valve guide	PP	2	
P21-5959	sede valvola - valve seat	PP	2	KKL-VP24-PP-SV
P21-5960	boccaglio - nozzle	PP	2	
p20-2017	spessore - shim	ASTM A194 Gr.1040	1	

(*) Components shall be furnished as spare kit, for complete code refer to table:

PUMP CODE	CODE for Spare Part Kit
M810/960	P20-2254-70
M1070/1140	P20-2254-95
M1260/1350	P20-2254-115
M1500	P20-2254-155

M810/1070/1260/1500PPSV
M960/1140/1350PPSV

Revisione / Revision : **0** | Sheet 2/2