Iwaki Magnetic Drive Pump

MDM Series

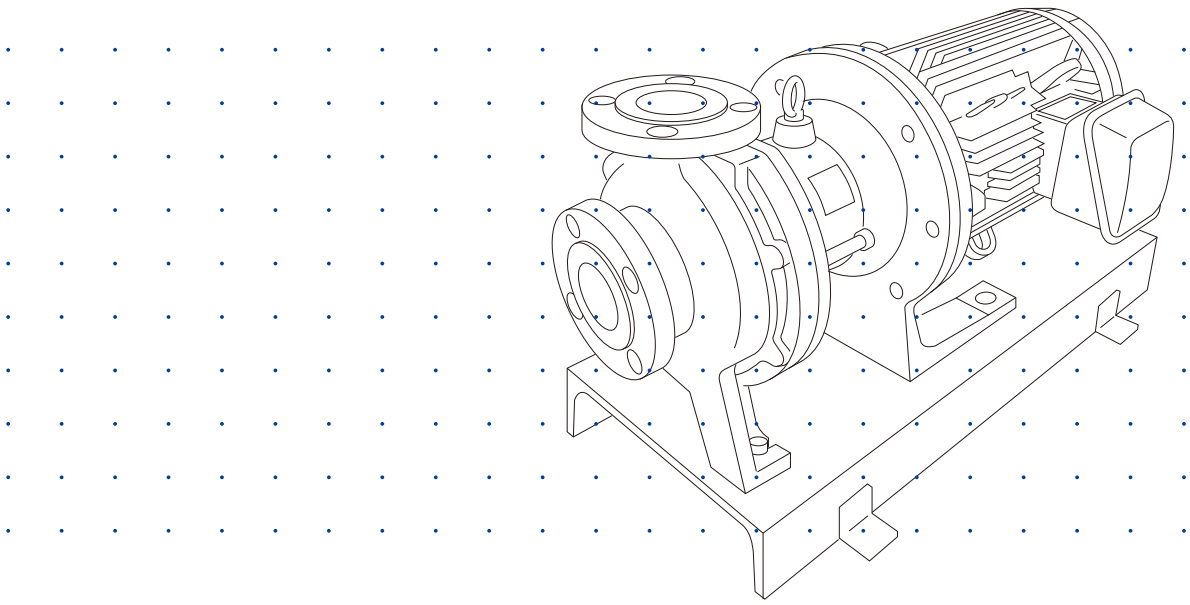

Instruction manual

Thank you for choosing our product.

⚠ Please read through this instruction manual before use.

This instruction manual describes important precautions and instructions for the product. Always keep it on hand for quick reference.

©2020 IWAKI CO., LTD.

Order confirmation

Open the package and check that the product conforms to your order. If any problem or inconsistency is found, immediately contact your distributor.

a. Check if the delivery is correct

Check the nameplate to see if the information such as model codes, discharge capacity, and discharge head are as ordered.

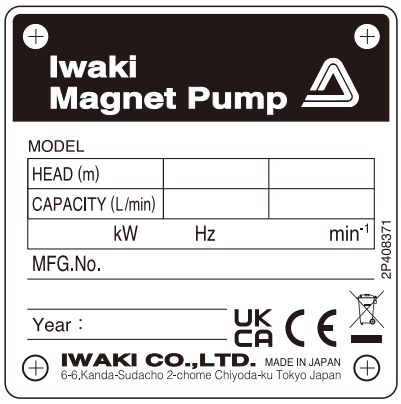

*The CE/UKCA markings on our product(s) are for us to market the product(s) into the European Union market/ the Great Britain (England, Wales and Scotland) market, however, the CE/UKCA markings do not ensure any safety or conformity of the product(s) outside the EU/GB markets.
When the pump is incorporated into the equipment marketed in the EU/GB markets, such equipment must meet all the requirements of applicable directives/regulations. In such a case, any person who places the equipment on the markets must carry CE/UKCA marks on the equipment as a manufacturer.

b. Check accessories are complete

Standard parts:

- Motor back pull-out bolts
  MDM25-1: Two (2) M10×50mm hexagon bolts
  MDM25-2/25-3/32-1/32-2/40-1/50-1: Two (2) M12×100mm hexagon bolts
  MDM40-2/50-2: Two (2) M16×150mm hexagon bolts
- Two guide bolts
  MDM40-2/50-2: Two (2) M16 bolts

Optional parts:

- Spare parts if ordered
- The DRN pump protector if ordered

c. Check if the delivery is damaged or deformed

Check for transit damage and loose bolts.

*Tighten the hex head bolts (901.4) that hold the rear casing support (161) by the rated torque at each model. Before tightening these bolts, be sure to loosen the hex head bolts (901.7) to unfix the foot support (330 or 330.2) from the base (890). See page 38 and the next page as well.

Models	Tightening torque
MDM25-1	58.8N•m
MDM25-2/25-3/32-1/32-2/40-1/50-1	85N•m
MDM40-2/50-2	120N•m

Contents

Order confirmation **2**

Safety instructions ***5***

WARNINGS **6**
CAUTIONS **7**
Precautions for use **9**

Overview ***10***

Introduction **10**
Pump structure & Operating principle 10
Conforming standards 10
Part names **11**
Pump 11
Limitations **12**
Pressure 12
Liquid 12
Identification codes **13**
Pump 13

Installation ***14***

Pump mounting **14**
Installation location 14
Pump position 14
Foundation work 14
Plumbing **15**
Flange connection 15
Piping load & Moment 15
System overview 16
Suction line 16
Discharge line 18
Wiring **19**
Power voltage 19
Electrical motor 19
Starting methods 20
Use of an inverter (full-voltage starting) 20
Sensors 20

Operation ***21***

Before operation **22**
Points to be checked 22
Priming 22
Motor rotation check 22
Degassing 23
Commissioning **24**

Starting process 24
Shut-down process 25
Suspension & Restart 25

Maintenance 26

Troubleshooting 26
Inspection 34
Daily inspection 34
Periodic inspection 35
Wear limits of bearing and spindle 36
Wear limits of mouth ring 37
Wear part replacement 38
Wear part list 38
Impeller part list 50
■ MDM25-1 50
■ MDM25-2 51
■ MDM25-3 (except "PKK" wet ends and "H" liquid temperature type) 52
■ MDM25-3 (only "PKK" wet ends and "H" liquid temperature type) 53
■ MDM32-1 54
■ MDM32-2 (except "PKK" wet ends and "H" liquid temperature type) 55
■ MDM32-2 (only "PKK" wet ends and "H" liquid temperature type) 56
■ MDM40-1 57
■ MDM40-2 58
■ MDM50-1 59
■ MDM50-2 60
Disassembly/Assembly 61
Before disassembly 61
■ Necessary tools 61
Pump disassembly 62
Impeller/Bearing removal 64
Mouth ring replacement 65
Spindle replacement 65
Front casing/Cover unit replacement 66
Impeller/Bearing mounting 67
Pump reassembly 68
Drive magnet demounting 70
Drive magnet mounting 71
Specifications/Outer dimensions 74
Specifications 74
■ Pump 74
Outer dimensions 75
■ Pumps with a baseplate 75
■ Pumps without a baseplate 76
EC DECLARATION OF CONFORMITY 77
UK DECLARATION OF CONFORMITY 78
CE/UKCA conformity 79

Safety instructions

Read through this section before use. This section describes important information for you to prevent personal injury or property damage.

■ Symbols

In this instruction manual, the degree of risk caused by incorrect use is noted with the following symbols. Please pay attention to the information associated with the symbols.

⚠ **WARNING**	**Indicates mishandling could lead to a fatal or serious accident.**
⚠ **CAUTION**	**Indicates mishandling could lead to personal injury or property damage.**

A symbol accompanies each precaution, suggesting the use of "Caution", "Prohibited actions" and specific "Requirement".

Caution marks



Prohibition mark



Requirement mark



⚠ Export Restrictions

Technical information contained in this instruction manual might be treated as controlled technology in your countries, due to agreements in international regime for export control.
Please be reminded that export license/permission could be required when this manual is provided, due to export control regulations of your country.

⚠WARNINGS


Prohibited

Access limitation

The magnet drive pump has a pair of strong magnets (the magnet capsule unit and drive magnet). The strong magnet field could adversely affect the persons who are assisted by electronic devices such as the pacemaker.


Electrical shock

Turn off power before service

Risk of personal injury. Before performing any service, turn off power to stop the pump and related devices and display a warning sign near the power switch to prevent others from restoring power during service.


Wear protectors

Wear protective clothing

Always wear protective clothing such as an eye protection, chemical resistant gloves, a mask and a face shield during disassembly, assembly or maintenance work. The specific solution will dictate the degree of protection. Refer to SDS precautions from the solution supplier.


Requirement

Use an overhead crane or any other proper transporting machine

Two or more operators may be needed for ensuring safe transport depending on the pump size and weight.


Requirement

Use the eye bolt or lifting holes (if provided)

Use the eye bolt when lifting the pump only. If the pump and the motor are mounted on the baseplate, use lifting holes on the baseplate.


Do not remodel

Do not modify the pump

Alterations to the pump carry a high degree of risk. It is not the manufacturer's responsibility for any failure or injury resulting from alterations to the pump.


Requirement

Daily inspection and maintenance

Daily inspection and maintenance are required for the prevention of chemical spray or leakage when handling:

- Explosive or flammable liquid,
- Corrosive liquid, or
- Harmful liquid.


Requirement

Ventilation

Fumes or vapours can be hazardous with certain solutions. Ensure proper ventilation at the operation site.

⚠CAUTIONS


Requirement

Qualified personnel only

The pump should be handled or operated by qualified personnel with a full understanding of the pump. Any person not familiar with the product should not take part in the operation or management of the pump. If necessary, provide training to operators.


Requirement

Do not catch the finger

Magnetic force of the pump is powerful. When taking apart or putting together the pump, take measures not to catch the finger in the foot support. Also, keep the drive magnet and the driven magnet free from iron debris/ powder.


Prohibited

Pay attention to magnet force

The pair of strong magnets in the pump and its magnetic force may adversely affect magnetic disks/cards or wrist watches. Do not bring them close to the pump.


Requirement

Use specified power only

Do not apply power other than that specified on the nameplate. Otherwise, failure, fire or electrical shock may result. Ensure the pump is properly grounded.


Prohibited

Do not run pump dry

Do not run pump dry (operation without priming water or with a suction valve closed). Internal parts are excessively worn by friction heat and fatal pump damage results.


Prohibited

Do not install/store the pump:

- In a flammable/explosive/corrosive atmosphere.
- In a dusty/humid environment.
- Where ambient temperature can exceed 0-40ºC.
- Where ambient humidity can exceed 35-85%RH.
- In direct sunlight or wind & rain (except an outdoor type).
- Under mechanical vibrations.


Prohibited

Do not use the pump in any condition other than its intended purpose

The use of the pump in any conditions other than those clearly specified may result in failure or injury. Use this product in specified conditions only.



Static electricity

When low electric conductivity liquids such as ultra-pure water and fluor inactive liquid (e.g. Fluorinert™) are handled, static electricity may be generated in the pump and may cause static discharge. Take countermeasures to remove static electricity.



Commissioning

Friction heat builds up and damages the internal parts. Break in the pump to expel gas from the pump and piping, especially when handling liquids that generate gas bubbles (hydrogen peroxide or sodium hypochlorite).



Spill precautions

Ensure protection and containment of solution in the event of plumbing or pump damage (secondary containment). Do not drain the liquid onto the floor.



Do not stand on the pump

Injury or damage may result when the pump turns over.



Do not touch the pump or pipe with bare hands

Risk of burns. The surface temperature of the pump or piping becomes very high during and immediately after operation, depending on the liquid temperature.



Grounding

Risk of electric shock! Always properly ground the pump. Conform to local electric codes.



Install a GFCI (earth leakage breaker)

An electrical failure of the pump may adversely affect other devices on the same line. Purchase and install an earth leakage breaker separately.



Before starting the pump

Ensure no one is around the pump before connecting the power. The pump does not have an ON-OFF switch and starts automatically when the power cable is plugged in.



Disposal of a used pump

Remove the liquid and flush it out before the pump is disconnected from piping. Dispose of any used or damaged pump and the removed liquid in accordance with local rules and regulations. If necessary, consult a licensed industrial waste disposal company.

Precautions for use

- Electrical work should be performed by a qualified electrician. Otherwise, personal injury or property damage may result.



- Tighten the hex head bolts (901.4) that hold the rear casing support (161) by the rated torque at each model. Before tightening these bolts, be sure to loosen the hex head bolts (901.7) to unfix the foot support (330 or 330.2) from the base (890).



- Allow sufficient space around the pump for easy access and maintenance.



- Use care handling the pump. Do not drop. An impact may affect pump performance. Do not use a pump that has been damaged to avoid the risk of electrical damage or shock.



- The pump is not waterproof. Do not operate the pump while wet with solution or water. Failure or injury may result. Immediately dry off the pump if it gets wet.



- Solution may leak. Do not close/block discharge line during operation. Install a relief valve to ensure safety and prevent damaged plumbing.



- Solution in the discharge line may be under pressure. Release the pressure from the discharge line before disconnecting plumbing or disassembly of the pump to avoid solution spray.



- Wear protective clothing when handling or working with pumps. Consult solution SDS for appropriate precautions. Do not come into contact with residual solution.



- Do not clean the pump or nameplate with a solvent such as benzine and thinner. This may discolour the pump or erase printing. Use a dry or a damp cloth or a neutral detergent.



- Empty and clean the pump before it is left stopped for a long time.



- In accordance with the European Directive 2012/19/EU on waste electrical and electronic equipment (WEEE), this product features the crossed-out wheelie bin symbol. When this product is disposed of in household wastes, toxic components included in it can cause major environmental and human health problems. Use appropriate waste collection systems for recovery and recycling. Contact your local distributor or nearest Iwaki company for the detailed collection systems.



Overview

Pump characteristics, features and part names are described in this section.

Introduction

Pump structure & Operating principle

The MDM series is an industrial magnetic drive pump which is designed for handling various chemicals including a strong acid and alkali.

Principle of operation

- The magnetic coupling between the drive magnet and the driven magnet (magnet capsule) transfers the rotation energy of the motor to the impeller in the front casing, where a liquid is transferred from the inlet to outlet.
- When the driven magnet rotates in the front casing, the mouth ring and the liner ring slide over each other as the thrust force pushes the driven magnet forward. Also, the bearing and the spindle slide over each other as the radial force accompanies the rotation of the driven magnet.
- ETFE or PFA (excluding MDM40-2/50-2) casing materials (front casing, rear casing, and impeller) are selectable depending on your application and operating conditions. The best combination of the sliding parts (mouth ring/liner ring, bearing/spindle) is determined by chemicals to be delivered. Gaskets are proven PTFE.

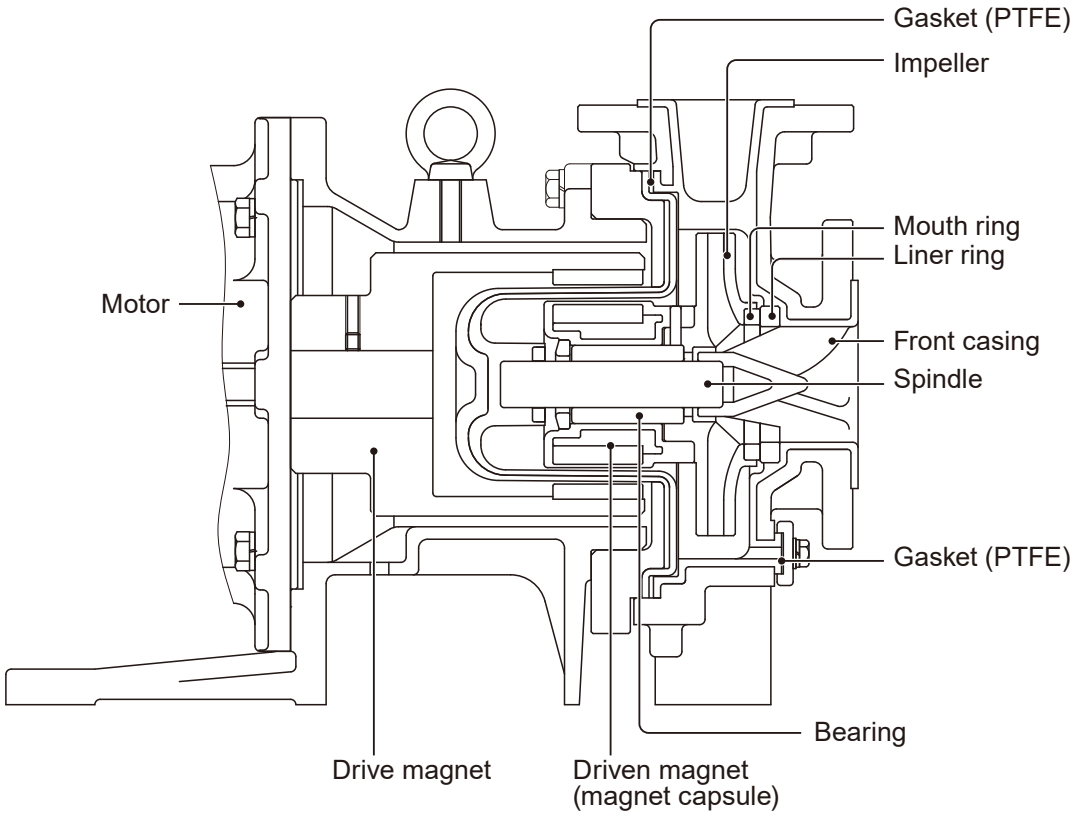

Conforming standards

Mounting dimensions: ISO 2858 (pumps with baseplate)
Flange PCD: JIS 10K/ ISO PN16/ ANSI 150LB

Pump

The illust below represents the pump on the baseplate.

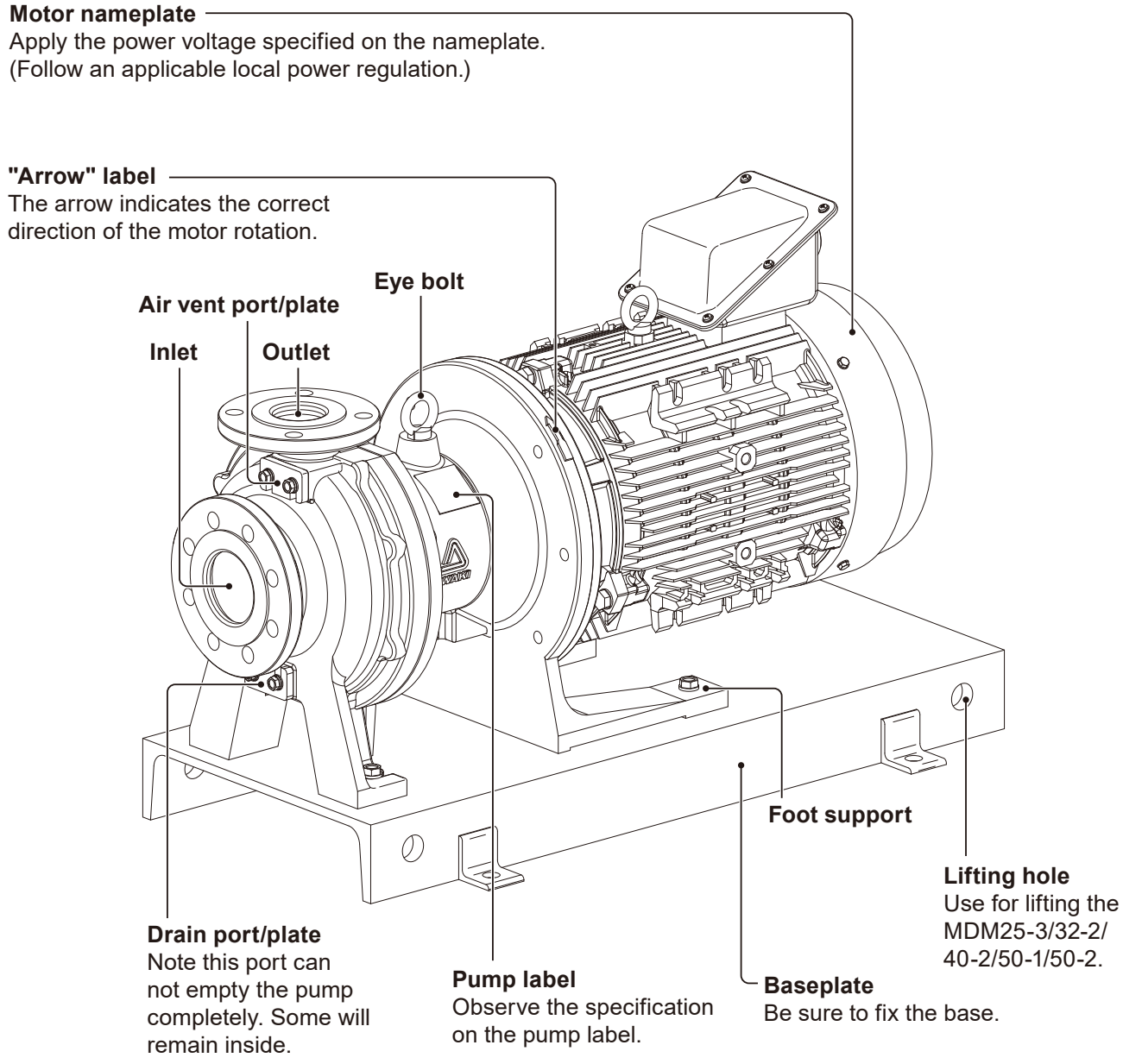

*The air vent port and the drain port are optionally available.

*Do not clean the pump or nameplate with a solvent such as benzine and thinner. This may discolour the pump or erase printing. Use a dry or a damp cloth or a neutral detergent.

Limitations

Pressure

Observe the maximum allowable discharge pressure that is set differently at pump model of:

MDM25-1/25-2/32-1/40-1/50-1: 1.0MPa

MDM25-3/32-2/40-2/50-2: 1.6MPa

Liquid

● Slurry

Generally the pump can not send slurry except the KK type (SiC bearing/SiC spindle) that can handle slurry up to 5% (concentration), 50μm (particle size) and 80Hs (hardness). When the KK type is used, you will need shorter maintenance frequency so the internal parts won't wear badly. Contact us for more information.

● Performance change

Shaft power, discharge capacity, and a delivery head vary with liquid specific gravity and liquid viscosity. The pump is designed for use with limited liquid properties. Contact us if any liquid other than that originally planned is used.

● Temperature change

Note that liquid viscosity, vapour pressure, and chemical aggressiveness change with liquid temperature. Monitor the liquid temperature for ensuring good operating conditions.

Allowable liquid temperature range (tap water):

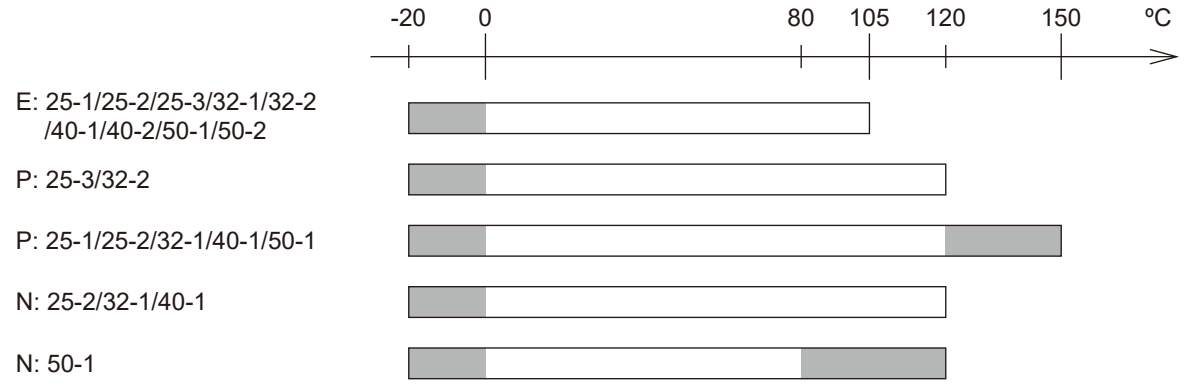

Allowable ambient temperature: 0 - 40°C

Allowable ambient humidity: 35 - 85%RH

*The codes of "E", "P", and "N" represent the plastic casing materials.

*The allowable liquid temperature range changes with liquid properties. Contact us for detail.

*Use in the grey zone could be possible depending on operating conditions. Contact us for detail.

Identification codes

Each code represents the following information.

Pump

MDM 40 - 150 1 E KK F 075 I - D 2 H

a b c d e f g h i j k

a. Pump inlet/outlet size

Code	Inlet	Outlet
25	40A	25A
32	50A	32A
40	65A	40A
50	80A	50A

b. Impeller O.D. (nominal)

100/ 110/ 120/ 130/ 140/ 150/ 160/ 165/ 170/ 180/ 190/ 195/ 200/ 205/ 210/ 220/ 225 mm

c. Impeller series

1: 1 series 2: 2 series 3: 3 series

d. Casing materials

E: CFRETFE P: PFA N: PFA (MDM25-2/32-1/40-1/50-1)

*There is a structural difference between the "P" and "N" casing material codes. These two are both PFA; however, the "P" type casing is over-molded in one cast iron cover while the "N" type casing is mounted in an assembled cast iron cover. See the wear parts replacement section on page 38 and the next page.

e. Bearing/Spindle materials

KK: SiC/SiC CF: High density carbon/High purity alumina ceramics

f. Motor

F: Flanged motor

g. Motor output

004: 0.37kW 007: 0.75kW 015: 1.5kW 022: 2.2kW 040: 4.0kW 055: 5.5kW
075: 7.5kW 110: 11kW 150: 15kW 185: 18.5kW 220: 22kW 300: 30kW

h. Flange connection/Motor standard

J: JIS flange + JIS motor I: ISO flange + IEC motor A: ANSI flange + JIS motor

i. Drain/Special version

Code	Drain port	Baseplate	Special version
A	No	Yes	Standard
S			Customized
D	Yes*		Standard
X			Customized
B	No	No	Standard
Y			Customized
E	Yes*		Standard
Z			Customized

*A pump that has the drain port will have the air vent port also if such a pump has the "P" casing material code.

j. Motor pole

2: Two poles 4: Four poles

k. Liquid temperature

No code: Standard H: High temperature compatible (MDM25-3/32-2)

Installation

This section describes the installation of the pump, piping and wiring. Read through this section before work.

Points to be observed

- Be sure to turn off power to stop the pump and related devices before service is performed.
- If you notice any abnormal or dangerous conditions, suspend operation immediately and inspect/solve problems.
- Do not place explosive or flammable material near the pump.
- Use of a damaged pump could lead to an electric shock or death.

Pump mounting

Select an installation location and mount the pump.

Installation location

1. If the pump unit is not anchored to the foundation and if the motor unit is heavier than the pump unit, the entire pump falls to the motor side. See page 75 and 76 for the weight of the pump.

2. Select a flat and firm foundation where is free from mechanical vibration.

3. Allow sufficient space around the pump for easy access and maintenance (motor back pull out).

4. The concrete foundation should be larger than a pump base footprint.

Pump position

Install the pump as close to the supply tank in the flooded suction method which is recommended. If the suction lift method is used due to the limitation on plumbing latitude, see page 18.

Foundation work

1. See the diagram when mounting the baseplate onto the concrete foundation.

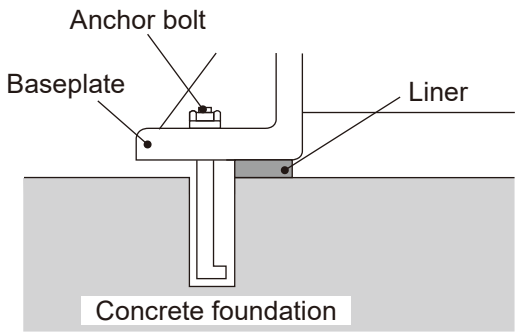

2. If you purchased the pump without the baseplate and mounted the pump directly on the foundation, do not anchor all the "legs". Leave the foot support legs NOT anchored, or the motor won't be pulled back.

Plumbing

Plumbing latitude is often affected by facility size and other conditions like the positional relationship between the tank location and the pump location. This section outlines the minimum requirements to ensure your plumbing system works well.

NOTE

- Before plumbing, remove the protective cap from the pump inlet and outlet.
- Do not apply too much adhesive or leave a screw or nut in the plumbing when it is assembled. Also, blow out any small debris from the plumbing so they won't be taken into the pump and cause failure.
- Use measures to keep the pump connections free from stress. Weight and thermal expansion/contraction of the piping can stress connection points.

Flange connection

Integrate the pump into your plumbing. Fasten the flange tightening bolts diagonally and evenly by the following torque. No gap is allowed between flanges. Always use a gasket in between metal flanges.

Bolt size	Tightening torque
M16	78.4N•m

Piping load & Moment

Do not apply excess load to the pump inlet flange and outlet flange. See below for the max allowable force and moment.

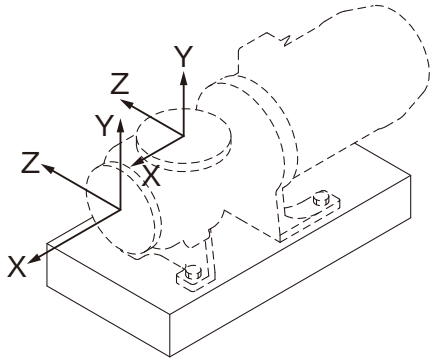

Maximum force to inlet & outlet flanges

Direction of load	Load (kN)			
	Outlet flange		Inlet flange	
	MDM25/32/40	MDM50	MDM25/32/40	MDM50
Fx	0.71	1.07	0.89	1.33
Fy (Pressure/Tension)	0.89/0.44	1.33/0.67	0.58	0.89
Fz	0.58	0.89	0.71	1.07

Maximum moments to inlet & outlet flanges

Direction of load	Moment (kN•m)			
	Outlet flange		Inlet flange	
	MDM25/32/40	MDM50	MDM25/32/40	MDM50
Mx	0.46	0.95	0.46	0.95
My	0.35	0.72	0.35	0.72
Mz	0.23	0.47	0.23	0.47

System overview

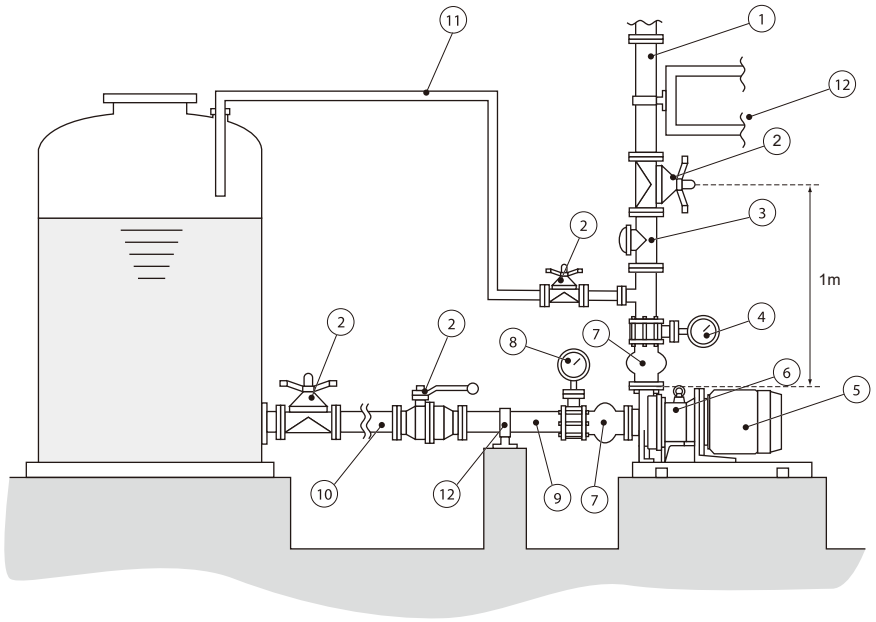

1. Discharge line
2. Gate valve
3. Check valve
4. Pressure gauge
5. Motor
6. Magnetic drive pump
7. Expansion joint
8. Vacuum (compound) gauge
9. Straight suction line
10. Suction line
11. Air vent line
12. Pipe support

Suction line

When the suction line of the system is build up, meet the following requirements:

- *Flooded suction:* Establish a flooded suction system. A suction lift system is much less efficient and so it is not recommended.
- *Line I.D.:* Ensure the suction line I.D. is equal to or larger than the pump inlet and NPSHr is satisfied.
- *Pipe resistance:* Establish the shortest line length and the minimum number of bends so the pipe resistance is minimized.
- *Straight section:* The suction line must be extended straight to the pump inlet. The minimum allowable length of the straight pipe varies with the pump inlet nominal diameter of:

  50A (2B) or smaller: 500mm

  65A (2½B) or wider: 8 times longer than the pump inlet I.D.
- *Eccentric reducer:* If the suction line I.D. is wider than the pump inlet and they can not be connected simply due to the different pipe size, use an eccentric reducer between them. Make sure the upper part of it is level so the air won't be trapped in there.

- *No air/gas entrapment:* In general, do not allow any arched line where air may be trapped. In a flooded suction system, lay a suction line in the down-slope (from the tank outlet to the pump inlet) of 1:100 or steeper. In a suction lift system; however, lay it in the up-slope to the pump inlet. If plumbing latitude is limited in your facility and you can not avoid an arched suction line in the system, mount an air vent device.

Good examples	Bad examples
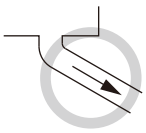 Down-slope from tank outlet to pump inlet (in a flooded suction system)	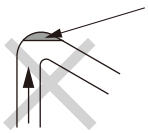 Trapped air in a sharp bend
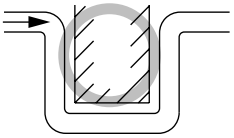	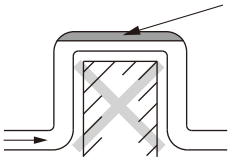 Trapped air in an arched suction line

- *Shut-off valve:* Install the shut-off valve (gate valve) in the suction line for the preventative maintenance that involves taking apart the pump.
- *Flushing line:* Install a flushing line for cleaning the pump after handling a harmful liquid.
- *Line end:* The suction line end should always be 500mm lower than any liquid level for the prevention of entrained air.
- *Foot valve:* In a suction lift system, always install a foot valve to the suction line end or a general back pressure valve in the suction line. The distance between the foot valve and the bottom of the supply tank should be at least 1 to 1.5D from the bottom of the supply tank. (D=Diameter of suction pipe).
- *Air tightness:* Joints of the suction line must be air tight, or output may be affected or the pump is worn badly by friction heat.
- *NPSH:* Always check that the NPSHr is satisfied and cavitation won't upset your system.

NPSHa ≥ NPSHr + 0.5m (0.5m is a margin)

$$NPSHa = 10^6 \times \frac{(Pa-Pv)}{\rho g} \pm hs - hfs$$

NPSHa: Net Positive Suction Head available (m)
NPSHr: Net Positive Suction Head required (m)
Pa: Absolute pressure to the tank liquid surface (MPa)
Pv: Vapour pressure of tank liquid (MPa)
hs: Suction lift (m)
hfs: Suction pipe resistance (m)
ρ: Liquid density (kg/m^3)
g: Acceleration of gravity (9.8 m/sec^2)

Discharge line

When the discharge line of the system is build up, meet the following requirements.

-*Discharge line I.D.:* If the piping is very long, its diameter should be determined by calculating the piping resistance. Otherwise, the specified performance may not be obtained due to increased piping resistance.

- *Discharge valve:* A discharge valve should be positioned around 1m away from the pump outlet. Mount an air vent line between the discharge valve and the pump outlet so entrained air can be expelled from the system successfully. If the back pressure valve is needed, install it between the discharge valve and the pump outlet as well.

- *Pressure gage:* Install a pressure gauge on the discharge line to monitor a discharge capacity and delivery head.

- *Check valve:* A check valve should be installed if any of the following conditions exists in the piping:
  - Discharge line is longer than 15m.
  - A delivery head is higher than 15m.
  - The top end of the discharge line is located 9m higher than the liquid level of the supply tank.
  - Several pumps are connected in parallel with the same piping.

- *Air vent line:* Provide an air vent line on the discharge line when the horizontal section of the discharge line is longer than 15m.

- *Drain valve:* Install a drain valve as necessary (to empty the plumbing).

- *Piping support:* Use measures to keep the pump connections free from stress. Weight and thermal expansion/contraction of the piping can stress connection points.

- *Priming line:* If the suction lift method is used due to the limitation on plumbing latitude, branch the discharge line and establish a priming system with a priming tank. Also, mount a foot valve at the end of the suction line in the supply tank so the liquid won't get back to the supply tank and empty the suction line when the pump is stopped. The distance between the foot valve and the bottom of the supply tank should be at least 1 to 1.5D from the bottom of the supply tank. (D=Diameter of suction pipe).

Wiring

Wiring for power voltage, earthing and external signals.

Points to be observed

- Electrical work should be performed by a qualified electrician. Always observe local electric codes.
- Do NOT perform wiring work while electric power is ON. Otherwise, an electrical shock or a short circuit may result. Be sure to turn off the power before wiring work.
- Be careful for electric power NOT to be turned on during work.

Power voltage

Electrical wiring and any work on power source must be performed by qualified persons only. It is not the manufacturer's responsibility for any injury and damage due to noncompliance with this notice. Contact us as necessary.

- *Electromagnetic switch:* Select the optimal specification according to the motor to be used (power voltage, capacity, etc.). Purchase separately.
- *Overcurrent protector:* Select the optimal specification according to the motor to be used. Purchase separately.
- *Electric device location:* Install an electromagnetic switch and other electric devices such as a stop button if any, in a control panel. If the control panel is installed out of doors, protect the electric devices from direct sunlight, wind & rain.
- *Pump/Control panel location:* They can be installed either indoors or outdoors (use an indoor use motor indoors only). However, safety measures should be taken so as not to expose the motor and power distribution unit to flooding or other natural environmental elements (rain, snow, direct sun, etc.).

Electrical motor

Check/adjust the motor before operation.

- Read through motor manufacturer's instruction manual before operation.
- Check the rotational direction of the motor before electric wiring.
- Ground the electric motor.
- Use a Star-Delta Starter, a motor soft starter, or an inverter for starting the 5.5kW or larger motor.

Starting methods

Use the star-delta starting method or an inverter to start the pump.

- If the full-voltage starting of the motor with a simple electric power circuit is taken, wiring work will be easy; however, the motor and electric devices are subject to a high striking current that will be 5 times, 6 times, or even 7 times larger than the rated current. This leads to a high starting torque and load to the motor so the use of the inverter is recommended for the safe starting.
- Even if the star-delta starting of the motor is taken, the motor is still subject to a sharp rise of acceleration torque that happens as the circuit transforms from the "Star" shape to the "Delta" shape. This sharp rise can be softened effectively if a proper Star-Delta transform time is determined and set.

Use of an inverter (full-voltage starting)

Use of an inverter allows for control of the motor frequency (revolution), the flow rate, and the delivery head as well as contributes to energy saving and long life. An inverter is used with the full-voltage starting of the motor.

Set the base frequency, the maximum frequency, and the maximum operating voltage, according to the motor specs. The minimum frequency is 25Hz in general. If it's set too low (less than 25Hz), the motor will stumble and heat up as cooling efficiency is lost.

*Consult with your inverter manufacture and your motor manufacture to determine the best combination.
*If the inverter is used for the motor control, an Iwaki DRN series pump protector can not be used.

Sensors

To protect the pump and monitor:

- A motor power current to detect, alert, and stop a significant load change.
- Pressure to detect, alert, and stop a significant pressure change.
- Flow volume to detect, alert, and stop a significant flow change.
- Liquid level to detect, alert, and stop a significant level change of the tank liquid.

*Monitor two or more items above for ensuring safe operation. An Iwaki DRN series pump protector will be a solution. Contact us for detail.

Operation

This section describes pump operation and programming. Run the pump after plumbing and wiring are completed.

Points to be observed

- To keep good cooling efficiency, clean the pump/motor surface at regular intervals.
- Do not run pump dry. If the suction valve is closed, the pump runs dry.
  *Having said this, the pumps with the carbon bearing and the ceramic spindle (CF type) would run dry continuously up to one hour without major problems. But then if the time is exceeded or if the next dry running happens before internal parts cool down completely, these parts may be excessively worn by friction heat.
  *If you notice the pump runs dry, do not open a valve to deliver liquid to the pump. Or heat shock may crack the internal parts of the pump. Leave it for more than one hour to cool them down.
- Check the rotational direction of the pump. Clockwise rotation seen from the motor end is correct.
- Reverse rotation of the motor/pump leads to fatal damage.
- Stop the pump immediately when it is running under cavitation.
- Stop the pump immediately when air is entrained from the suction line.
- Decoupling of the drive magnet and the driven magnet brings about eddy current, Joule heat as the eddy current is lost, and eventually an unacceptable hot motor. Stop the pump immediately and leave it for more than one hour to cool it down. The magnets will be coupled again as the pump is turned ON (or they may not be coupled if they have been demagnetized considerably by the heat.).
- If the motor power is cycled, observe the minimum interval of 10 minutes. Or the internal parts are aged faster or worn excessively.
- Keep liquid temperature change within 80˚C (176˚F) at any time during operation or stop.
- Close the discharge valve and then start the pump to avoid water hammer (and slowly open the discharge valve to the desired level).
- Closed-discharge operation should be within one minute, or friction heat builds up and damages the internal parts of the pump.
- If power is interrupted while the pump is running, turn off the external switch of the pump immediately and close a discharge valve.
- Do not exceed the maximum operating pressure of the pump.
- The surface temperature of the pump or pipe rises high along with liquid temperature in or right after operation. Take preventive measures.

Liquid temperature	Surface temperature (at ambient 40°C=104°F)
80°C (176°F)	80°C (176°F)
100°C (212°F)	90°C (194°F)
120°C (248°F)	110°C (230°F)
150°C (302°F)	130°C (266°F)

- In case the operating noise interrupts communication between operators to secure a safety or adversely affects human health, provide a noise reduction cover.

Model	Noise level
MDM25-1/25-2/32-1/40-1	85dB
MDM25-3/32-2/40-2/50-1/50-2	95dB

Before operation

Check plumbing and wiring are correct. Prime the pump and remove air.

Points to be checked

Before operation, check if:

- Connection bolts are tight. Tighten connection bolts at regular intervals as they may become loose over time.
  *To properly hold the rear casing support (161) with the hex head bolts (901.4), unfix the foot support (330 or 330.2) from the base (890) by loosening the hex head bolts (901.7) in advance.
- Liquid level in a supply tank is enough so air won't be entrained into the system.

Priming

In a flooded suction system, take the steps below. In a suction lift system, the suction line and the pump need filled with liquid somehow.

Points to be observed
Be sure to turn off power to stop the pump and related devices before service is performed.

1 Open the suction line.

2 Open the air vent line.
Or open the discharge line instead.

Motor rotation check

Check electric wiring is correct and the motor rotates in the correct direction.

1 Close the discharge valve.
The suction line and the pump must be filled with liquid.

2 Turn ON the pump.

3 Run the pump for a very short time (0.5 sec.).
If the inverter is used, slowly raise the frequency to 10-15Hz and then reduce to 0Hz.

4 Check the motor rotates in the direction of the arrow mark.
The correct direction is the CW direction seen from the motor end.

5 Check the motor fan stops smoothly.
If necessary, check the rotating parts of the pump.

Degassing

The air/gas in the pump and plumbing is the obstacle to liquid delivery and needs to be expelled before the pump is started.

1 Open the suction line.

2 Open the air vent line.

If the air vent line is not provided or if its piping resistance is too high, open the discharge valve instead.

NOTE

Do not open the discharge valve too much. Or liquid starts to be pumped up before air is completely expelled.

3 Run the pump for a very short time (0.5 sec.).

If the inverter is used, slowly raise the frequency to 10-15Hz and then reduce to 0Hz.

NOTE

Do not run the pump for a long time. If the pump runs with air or gas, friction heat will build up and damage rotating/sliding parts of the pump.

4 Check the motor fan stops smoothly.

Check the rotating parts of the pump if necessary.

5 Repeat the step 3 and the step 4 until air/gas is expelled completely.

When liquids that generate gas bubbles are delivered or when the suction line is too long, it's going to be hard to remove air/gas. Repeat this momentary run 10 times or more.

6 Close the air vent line.

Commissioning

Read this section before operation.

Points to be observed

- Check for a loose bolt on the pump and plumbing.
- Tighten the hex head bolts (901.4) that hold the rear casing support (161) by the rated torque at each model. Before tightening these bolts, be sure to loosen the hex head bolts (901.7) to unfix the foot support (330 or 330.2) from the base (890). See the Wear part list section on page 38 and the next page and identify the parts.

Models	Tightening torque
MDM25-1	58.8N•m
MDM25-2/25-3/32-1/32-2/40-1/50-1	85N•m
MDM40-2/50-2	120N•m

- Do not run the motor in reverse. Or the pump may be damaged.
- Closed-discharge operation should be within one minute, or friction heat builds up and the damages the internal parts of the pump.
- Observe the minimum flow rate, or the self-radiation mechanism does not work effectively to cool down the sliding parts (bearing/spindle) and rotating parts (mouth ring/liner ring).

Models	2P	4P
MDM25	20L/min	10L/min
MDM32/40/50	50L/min	20L/min

Starting process

Take the steps below to start up.

1 Open the suction line.

Adjust the discharge valve to the minimum flow rate.

NOTE

Closed-discharge operation or closed-suction damages the pump. Do not keep a valve closed in operation.

2 Run the pump and check for abnormal noise or vibration.

If necessary, stop the pump and determine/remove the root cause of abnormal noise/vibration.

3 Further open the discharge valve to the desired flow rate and pressure.

Turn the valve slowly so water hammer won't happen.

4 Check for flow, pressure, noise and vibration.

If necessary, stop the pump and determine/remove the root cause of abnormality.

NOTE

If you notice any abnormal or dangerous conditions, suspend operation immediately and inspect/solve problems. See the troubleshooting section as well.

Shut-down process

Take the steps below to shut it down.

Points to be observed

- If pump operation is stopped in cold weather, liquid inside the pump cavity may freeze and damage the pump. Be sure to drain liquid completely. If the liquid is harmful, empty and then flush it out. In case of a short term shut down, which does not allow removal of liquids, use a band heater to prevent liquid from freezing.
- In the event of service power failure, turn the power switch off and close the discharge valve.

1 Close the discharge valve slowly to the minimum flow rate.
Risk of water hammer. Do not close the discharge valve sharply.

2 Turn off the pump.

3 Check the motor fan stops smoothly.
Check the rotating parts of the pump if necessary.

Suspension & Restart

When the system is rebooted, special care needs to be taken depending on system conditions.

Points to be observed

- Do not turn on the pump before it stops rotating completely, or the drive magnet and the driven magnet will be decoupled.
- If the system is empty, return to the priming section in this manual and take the full steps to reboot the pump and the system.

- When handling liquids that generate gas bubbles (e.g. sodium hypochlorite), repeat the degassing process until gas is completely expelled from the pump and plumbing.
- When handling liquids that crystallizes (e.g. salt water), the pump bearing and the spindle may be caught in crystallization. Before the system is rebooted, manually turn the motor fan to see if it rotates free. If not, take apart the pump and clean the inside of the pump.
- At a freezing temperature, the pump bearing and the spindle may be caught in a frozen liquid. Before the system is rebooted, manually turn the motor fan to see if it rotates free. If not, take measures to melt the frozen liquid.
- Empty and clean the pump when it is left unused for a long time. Before the system is rebooted, tighten connection bolts to make sure liquid won't leak.

Maintenance

This section describes troubleshooting, maintenance, wear part replacement, exploded views and specifications.

Points to be observed

- Follow instructions in this manual for replacement of wear parts. Do not disassemble the pump beyond the extent of the instructions.
- Always wear protective clothing such as an eye protection, chemical resistant gloves, a mask and a face shield during disassembly, assembly or maintenance work. The specific solution will dictate the degree of protection. Refer to SDS precautions from the solution supplier.
- Risk of electrical shock. Be sure to turn off power to stop the pump and related devices before service is performed.
- Magnetic force of the pump is powerful. When taking apart or putting together the pump, take measures not to catch the finger in the metal parts.
- The magnet drive pump has a pair of strong magnets (the magnet capsule unit and the drive magnet). The strong magnet field could adversely affect the persons who are assisted by electronic devices such as the pacemaker.

NOTE

- It's not the manufacturer's responsibility for any failure due to corrosion or erosion occurred in your operating condition.
- When repair is needed to our pumps, contact us or the manufacturer of the machine in which our product is built.
- Be sure to drain chemicals and flush the inside of the pump before return. Or harmful chemicals may spill out in transit.

Troubleshooting

First check the following points. If the following measures do not help remove problems, contact your nearest distributor.

Sign	Possible status	Possible causes	Corrective actions	Possible damage
Unusual vibration/ noise	Pump runs dry.	Pump is not primed.	Prime the pump and the suction line.	• Scratched/cracked sliding/rotating parts • Fused plastic parts • A damaged casing
		An empty tank		
		Closed suction line		
	Pump runs with entrained air.	Air was not fully expelled in the degassing process.	Make sure air is expelled before operation.	• Scratched/cracked sliding/rotating parts • Fused plastic parts • A cracked impeller • A damaged casing
		An air pocket in the suction line	Remove an arched suction line.	
		A low liquid level in the tank	Monitor/observe the minimum liquid level.	
		A broken water-/ air-tightness	Tighten connection bolts.	

Sign	Possible status	Possible causes	Corrective actions	Possible damage
Unusual vibration/ noise	Cavitation	Pipe resistance of the suction line is too high.	Use a wider/shorter/ straighter pipe.	• Scratched/cracked sliding/rotating parts • Fused plastic parts • A cracked impeller • A damaged casing
		Foreign matters in the suction line	Install a screen baffle in the supply tank.	
		A clogged strainer	Clean it at intervals.	
	Clogged with foreign matters or slurry particles	Foreign matters or slurry particles from the supply tank.	Install a screen baffle in the supply tank.	• Scratched/cracked sliding/rotating parts • Fused plastic parts • A clogged self-radiation path • A cracked impeller • Foreign matters in the impeller • Damaged magnet capsule and rear casing • A damaged casing
	A closed suction line	A closed valve in the suction line	Observe the correct starting process.	• Scratched/cracked sliding/rotating parts • Fused plastic parts • A damaged casing
		A clogged strainer	Clean it at intervals. Monitor the suction line pressure.	
	Too much pump output	The discharge valve is opened too much.	Adjust valve opening. Monitor the motor current as well.	–
		A flow into a branched line.	Use the main line.	
	Loose connection bolts	Rated torque was not observed.	Tighten by the rated torque.	–
		Bolts are loosened in operation.	Tighten bolts at intervals.	
	Pump is not mounted properly.	Pump-baseplate fixing bolts are loose.	Tighten to a higher torque.	–
		No plumbing support	Install plumbing supports.	
		Pump is stumbling.	Select a level and rigid foundation.	
Low discharge pressure	Pump runs dry.	Pump is not primed.	Prime the pump and the suction line.	• Scratched/cracked sliding/rotating parts • Fused plastic parts • A damaged casing
		An empty tank		
		Closed suction line		
	Pump runs with entrained air.	Air was not fully expelled in the degassing process.	Make sure air is expelled before operation.	• Scratched/cracked sliding/rotating parts • Fused plastic parts • A cracked impeller • A damaged casing
		An air pocket in the suction line	Remove an arched suction line.	
		A low liquid level in the tank	Monitor/observe the minimum liquid level.	
		A broken water-/ air-tightness	Tighten connection bolts.	

Sign	Possible status	Possible causes	Corrective actions	Possible damage
Low discharge pressure	Cavitation	Pipe resistance of the suction line is too high.	Use a wider/shorter/straighter pipe.	• Scratched/cracked sliding/rotating parts • Fused plastic parts • A cracked impeller • A damaged casing
		Foreign matters in the suction line	Install a screen baffle in the supply tank.	
		A clogged strainer	Clean it at intervals.	
	Clogged with foreign matters or slurry particles	Foreign matters or slurry particles from the supply tank.	Install a screen baffle in the supply tank.	• Scratched/cracked sliding/rotating parts • Fused plastic parts • A clogged self-radiation path • A cracked impeller • Foreign matters in the impeller • Damaged magnet capsule and rear casing • A damaged casing
	A closed suction line	A closed valve in the suction line	Observe the correct starting process.	• Scratched/cracked sliding/rotating parts • Fused plastic parts • A damaged casing
		A clogged strainer	Clean it at intervals. Monitor the suction line pressure.	
	Too much pump output	The discharge valve is opened too much.	Adjust valve opening. Monitor the motor current as well.	–
		A flow into a branched line	Use the main line.	
	Motor runs in reverse.	Wrong electric wiring	Correct wiring.	–
	The drive/driven magnets are decoupled.	Overload operation	Observe the rated motor current.	–
		Water hummer at start up	Remove air from the pump and the discharge line.	
High discharge pressure	The min flow rate is not satisfied.	A closed discharge valve	Adjust the valve to meet the min flow rate.	• Scratched/cracked sliding/rotating parts • Fused plastic parts • A damaged casing
		Pipe resistance of the discharge line is too high.	Adjust the discharge valve, remove air, and clean the strainer.	
Unstable discharge pressure	Entrained air	Air is not expelled completely.	Remove air completely.	• Scratched/cracked sliding/rotating parts • Fused plastic parts • A cracked impeller • A damaged casing
		An air pocket in the suction line	Remove an arched suction line.	
		A low liquid level in the tank	Monitor/observe the minimum liquid level.	
		A broken water-/air-tightness	Tighten connection bolts.	

Sign	Possible status	Possible causes	Corrective actions	Possible damage
Unstable discharge pressure	Cavitation	Pipe resistance of the suction line is too high.	Use a wider/shorter/ straighter pipe.	• Scratched/cracked sliding/rotating parts • Fused plastic parts • A cracked impeller • A damaged casing
		Foreign matters in the suction line	Install a screen baffle in the supply tank.	
		A clogged strainer	Clean it at intervals.	
	Clogged with foreign matters or slurry particles	Foreign matters or slurry particles from the supply tank.	Install a screen baffle in the supply tank.	• Scratched/cracked sliding/rotating parts • Fused plastic parts • A clogged self-radiation path • A cracked impeller • Foreign matters in the impeller • Damaged magnet capsule and rear casing • A damaged casing
Low suction pressure	Cavitation	Pipe resistance of the suction line is too high.	Use a wider/shorter/ straighter pipe.	• Scratched/cracked sliding/rotating parts • Fused plastic parts • A cracked impeller • A damaged casing
		Foreign matters in the suction line	Install a screen baffle in the supply tank.	
		A clogged strainer	Clean it at intervals.	
	A closed suction line	A closed valve in the suction line	Observe the correct starting process.	• Scratched/cracked sliding/rotating parts • Fused plastic parts • A damaged casing
		A clogged strainer	Clean it at intervals. Monitor the suction line pressure.	
Low pump output	Entrained air	Air is not expelled completely.	Remove air completely.	• Scratched/cracked sliding/rotating parts • Fused plastic parts • A cracked impeller • A damaged casing
		An air pocket in the suction line	Remove an arched suction line.	
		A low liquid level in the tank	Monitor/observe the minimum liquid level.	
		A broken water-/ air-tightness (suction line)	Tighten connection bolts.	
	Cavitation	Pipe resistance of the suction line is too high.	Use a wider/shorter/ straighter pipe.	• Scratched/cracked sliding/rotating parts • Fused plastic parts • A cracked impeller • A damaged casing
		Foreign matters in the suction line	Install a screen baffle in the supply tank.	
		A clogged strainer	Clean it at intervals.	
	Clogged with foreign matters or slurry particles	Foreign matters or slurry particles from the supply tank.	Install a screen baffle in the supply tank.	• Scratched/cracked sliding/rotating parts • Fused plastic parts • A clogged self radiation path • A cracked impeller • Foreign matters in the impeller • Damaged magnet capsule and rear casing • A damaged casing

Sign	Possible status	Possible causes	Corrective actions	Possible damage
Low pump output	A closed suction line	A closed valve in the suction line	Observe the correct starting process.	• Scratched/cracked sliding/rotating parts • Fused plastic parts • A damaged casing
		A clogged strainer	Clean it at intervals. Monitor the suction line pressure.	
	Motor runs in reverse.	Wrong electric wiring	Correct wiring.	–
	The drive/driven magnets are decoupled.	Overload operation	Observe the rated motor current.	–
		Water hummer at start up	Remove air from the pump and the discharge line.	
No pump output	Pump runs dry.	Pump is not primed.	Prime the pump and the suction line.	• Scratched/cracked sliding/rotating parts • Fused plastic parts • A damaged casing
		An empty tank		
		Closed suction line		
	Pump runs with entrained air.	Air was not fully expelled in the degassing process.	Make sure air is expelled before operation.	• Scratched/cracked sliding/rotating parts • Fused plastic parts • A cracked impeller • A damaged casing
		An air pocket in the suction line	Remove an arched suction line.	
		A low liquid level in the tank	Monitor/observe the minimum liquid level.	
		A broken water-/air-tightness	Tighten connection bolts.	
	The min flow rate is not satisfied.	A closed discharge valve	Adjust the valve to meet the min flow rate.	• Scratched/cracked sliding/rotating parts • Fused plastic parts • A damaged casing
		Pipe resistance of the discharge line is too high.	Adjust the discharge valve, remove air, and clean the strainer.	
	Clogged with foreign matters or slurry particles	Foreign matters or slurry particles from the supply tank.	Install a screen baffle in the supply tank.	• Scratched/cracked sliding/rotating parts • Fused plastic parts • A clogged self-radiation path • A cracked impeller • Foreign matters in the impeller • Damaged magnet capsule and rear casing • A damaged casing
	A closed suction line	A closed valve in the suction line	Observe the correct starting process.	• Scratched/cracked sliding/rotating parts • Fused plastic parts • A damaged casing
		A clogged strainer	Clean it at intervals. Monitor the suction line pressure.	
	The drive/driven magnets are decoupled.	Overload operation	Observe the rated motor current.	–
		Water hummer at start up	Remove air from the pump and the discharge line.	

Sign	Possible status	Possible causes	Corrective actions	Possible damage
High motor power current	Clogged with foreign matters or slurry particles	Foreign matters or slurry particles from the supply tank.	Install a screen baffle in the supply tank.	• Scratched/cracked sliding/rotating parts • Fused plastic parts • A clogged self-radiation path • A cracked impeller • Foreign matters in the impeller • Damaged magnet capsule and rear casing • A damaged casing
	Too much pump output	The discharge valve is opened too much.	Adjust valve opening. Monitor the motor current as well.	–
		A flow into a branched line.	Use the main line.	
Low motor power current	Pump runs dry.	Pump is not primed.	Prime the pump and the suction line.	• Scratched/cracked sliding/rotating parts • Fused plastic parts • A damaged casing
		An empty tank		
		Closed suction line		
	Pump runs with entrained air.	Air was not fully expelled in the degassing process.	Make sure air is expelled before operation.	• Scratched/cracked sliding/rotating parts • A cracked impeller • Fused plastic parts • A damaged casing
		An air pocket in the suction line	Remove an arched suction line.	
		A low liquid level in the tank	Monitor/observe the minimum liquid level.	
		A broken water-/air-tightness	Tighten connection bolts.	
	Cavitation	Pipe resistance of the suction line is too high.	Use a wider/shorter/straighter pipe.	• Scratched/cracked sliding/rotating parts • Fused plastic parts • A cracked impeller • A damaged casing
		Foreign matters in the suction line	Install a screen baffle in the supply tank.	
		A clogged strainer	Clean it at intervals.	
	The min flow rate is not satisfied.	A closed discharge valve	Adjust the valve to meet the min flow rate.	• Scratched/cracked sliding/rotating parts • Fused plastic parts • A damaged casing
		Pipe resistance of the discharge line is too high.	Adjust the discharge valve, remove air, and clean the strainer.	
	Clogged with foreign matters or slurry particles	Foreign matters or slurry particles from the supply tank.	Install a screen baffle in the supply tank.	• Scratched/cracked sliding/rotating parts • Fused plastic parts • A clogged self-radiation path • A cracked impeller • Foreign matters in the impeller • Damaged magnet capsule and rear casing • A damaged casing
	A closed suction line	A closed valve in the suction line	Observe the correct starting process.	• Scratched/cracked sliding/rotating parts • Fused plastic parts • A damaged casing
		A clogged strainer	Clean it at intervals. Monitor the suction line pressure.	

Sign	Possible status	Possible causes	Corrective actions	Possible damage
Low motor power current	Motor runs in reverse.	Wrong electric wiring	Correct wiring.	–
	The drive/driven magnets are decoupled.	Overload operation	Observe the rated motor current.	–
		Water hummer at start up	Remove air from the pump and the discharge line.	
Unstable motor power current	Entrained air	Air is not expelled completely.	Remove air completely.	• Scratched/cracked sliding/rotating parts • Fused plastic parts • A cracked impeller • A damaged casing
		An air pocket in the suction line	Remove an arched suction line.	
		A low liquid level in the tank	Monitor/observe the minimum liquid level.	
		A broken water-/ air-tightness	Tighten connection bolts.	
	Cavitation	Pipe resistance of the suction line is too high.	Use a wider/shorter/ straighter pipe.	• Scratched/cracked sliding/rotating parts • Fused plastic parts • A cracked impeller • A damaged casing
		Foreign matters in the suction line	Install a screen baffle in the supply tank.	
		A clogged strainer	Clean it at intervals.	
Hot pump surface	The min flow rate is not satisfied.	A closed discharge valve	Adjust the valve to meet the min flow rate.	• Scratched/cracked sliding/rotating parts • Fused plastic parts • A damaged casing
		Pipe resistance of the discharge line is too high.	Adjust the discharge valve, remove air, and clean the strainer.	
Hot motor surface	Too much pump output	The discharge valve is opened too much.	Adjust valve opening. Monitor the motor current as well.	–
		A flow into a branched line.	Use the main line.	
A leak from a connection point	Loose connection bolts	Rated torque was not observed.	Tighten by the rated torque,	Gaskets becomes inelastic if liquid temperature is too high.
		Bolts are loosened in operation.	Tighten bolts at intervals.	
A leak from the foot support	Pump runs dry.	Pump is not primed.	Prime the pump and the suction line.	–
		An empty tank		
		Closed suction line		
	Entrained air	Air is not expelled completely.	Remove air completely.	• Scratched/cracked sliding/rotating parts • Fused plastic parts • A cracked impeller • A damaged casing • The rear casing hits against the drive magnet.
		An air pocket in the suction line	Remove an arched suction line.	
		A low liquid level in the tank	Monitor/observe the minimum liquid level.	
		A broken water-/ air-tightness	Tighten connection bolts.	

Sign	Possible status	Possible causes	Corrective actions	Possible damage
A leak from the foot support	Cavitation	Pipe resistance of the suction line is too high.	Use a wider/shorter/straighter pipe.	• Scratched/cracked sliding/rotating parts • Fused plastic parts • A cracked impeller • A damaged casing • The rear casing hits against the drive magnet.
		Foreign matters in the suction line	Install a screen baffle in the supply tank.	
		A clogged strainer	Clean it at intervals.	
	The min flow rate is not satisfied.	A closed discharge valve	Adjust the valve to meet the min flow rate.	• Scratched/cracked sliding/rotating parts • Fused plastic parts • A damaged casing • The rear casing hits against the drive magnet.
		Pipe resistance of the discharge line is too high.	Adjust the discharge valve, remove air, and clean the strainer.	
	Clogged with foreign matters or slurry particles	Foreign matters or slurry particles from the supply tank.	Install a screen baffle in the supply tank.	• Scratched/cracked sliding/rotating parts • Fused plastic parts • A clogged self-radiation path • A cracked impeller • Foreign matters in the impeller • Damaged magnet capsule and rear casing • A damaged casing • The rear casing hits against the drive magnet.
	A closed suction line	A closed valve in the suction line	Observe the correct starting process.	• Scratched/cracked sliding/rotating parts • Fused plastic parts • A damaged casing • The rear casing hits against the drive magnet.
		A clogged strainer	Clean it at intervals. Monitor the suction line pressure.	
	Water hummer	Sharp valve operation (discharge line)	Slowly operate the valve.	• A damaged casing • The rear casing hits against the drive magnet.
		An air pocket in the suction line	Remove an arched suction line.	

Inspection

Perform daily and periodic inspection to keep the best pump performance and safety.

Daily inspection

Check the following points. If you notice any abnormal or dangerous conditions, suspend operation immediately and inspect/solve problems. See the troubleshooting section as necessary.
When wear parts come to the life limit, replace them with new ones. Contact your distributor for detail.

No.	States	Points to be checked
1	Evidence of a leak	• A leak point. Do not go without solving problems.
2	Pumping	• If liquid is pumped. Use the flow meter.
		• If the suction pressure and the discharge pressure are at the rated level.
		• If the liquid level in the tank is not too low.
		• If liquid has deteriorated, crystallized or settled.
3	Noise and vibration	• If abnormal noise or vibration occurs. They are signs of abnormal operation.
4	Air ingress from the pump head joints and the suction line	• If a leak occurs. • If pumped liquid includes air bubbles, check lines for leakage and retighten as necessary.
5	Motor power current	• If the motor power current is too high. That's the sign of overpressure. See the motor spec for the rated current.
6	Parameters	• If pressure, a flow rate, or the motor power current is greatly changed. They are signs of abnormal operation. See the troubleshooting section and take effective measures.
7	A spare pump	• If a spare pump is stored, run it from time to time to keep it ready for operation at any time when needed.

Periodic inspection

To ensure efficient and smooth operation, take apart the pump and check the internal conditions at regular intervals (6 months). Be careful not to have a big impact on internal sliding parts and plastic parts. Since the magnets used in the pump are powerful, be careful not to catch your fingers or hand between them during disassembly or assembly. Also, keep the magnet unit away from any electronic device that could be affected by a strong magnetic field.

Part names	Points to be checked	Measures
Drive magnet	Wear tracks	Contact us.
	If the drive magnet is correctly mounted with hex. socket set screws and they are not loose.	Remount the drive magnet to the motor shaft and tighten the screws.
	Decentering of magnet and motor shaft (Max.1/10mm)	Retighten the hex. socket set screws or check the motor. Contact us as necessary.
Rear casing	Wear tracks	Contact us.
	Cracked wet ends	
	Worn-out rear thrust ring	
	Worn-out spindle	
	Dirty parts	Clean parts.
Magnet capsule (driven magnet)	Wear tracks	Contact us.
	Cracks	
	Worn-out bearing. See next page.	
	Loose impeller	
Impeller	Worn-out mouth ring. See later page 37.	Contact us.
	Cracks	
	Clogged impeller	Clean the impeller.
	Deformation	Contact us.
Front casing	Dirty wet ends	Clean parts.
	Cracks	Contact us.
	Cracked/Worn-out liner ring	
	Cracked gasket	
	Wear tracks	
	Clogged drain port or air vent port	Clean the port. If necessary, contact us.
Spindle	Cracks	Contact us.
	Worn-out spindle. See next page.	

Wear limits of bearing and spindle

Check wear degree of the bearing and spindle.

Model	Bearing I.D.		Spindle O.D.	
	Before use	Wear limit	Before use	Wear limit
MDM25-1	20mm	21mm	20mm	19mm
MDM25-2/32-1/40-1	26mm	27mm	26mm	25mm
MDM25-3/32-2/40-2/50-1/50-2	30mm	31mm	30mm	29mm

- For the pumps with the carbon bearing and the alumina ceramic spindle (CF type), if the clearance between the bearing and the spindle exceeds 1mm, either of them, whichever has greater wear, should be replaced no matter whether the wear limit is exceeded or not.
- For pumps with the SiC bearing and SiC spindle (KK type), if the clearance between the bearing and spindle exceeds 1mm, replace both the bearing and spindle together, regardless of whether the wear limit is exceeded.
- Initial wear may appear in the sliding part during the early stages of operation. This should not be mistaken for an abnormal condition.

Wear limits of mouth ring

Check wear degree of the mouth ring.

Model	Mouth ring thickness	
	Initial thickness	Wear limit
MDM25-1/25-2/32-1	8mm	6mm
MDM25-3/32-2/40-1/50-1	9mm	7mm
MDM40-2/50-2	10mm	8mm

The step between the surfaces of the mouth ring and the impeller upon shipment is 2mm. Replacing the mouth ring is recommended before this step is reduced to zero.

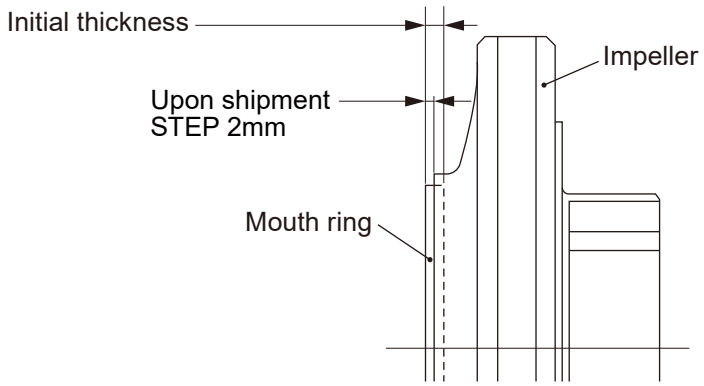

Wear part replacement

Appropriate spare parts are necessary to ensure continued pump operation. Expendable parts shown below should always be kept on hand. When placing orders, supply the following information.

1. Part names and part number (see the diagram below.)
2. Pump model identification code and manufacturing number (see the pump nameplate.)
3. Drawing number (if you have received a certified drawing)

! Precautions

- Solution in the discharge line may be under pressure. Release the pressure from the discharge line before disconnecting plumbing or disassembly of the pump to avoid solution spray.
- Rinse and clean wet ends thoroughly with tap water.

Wear part list

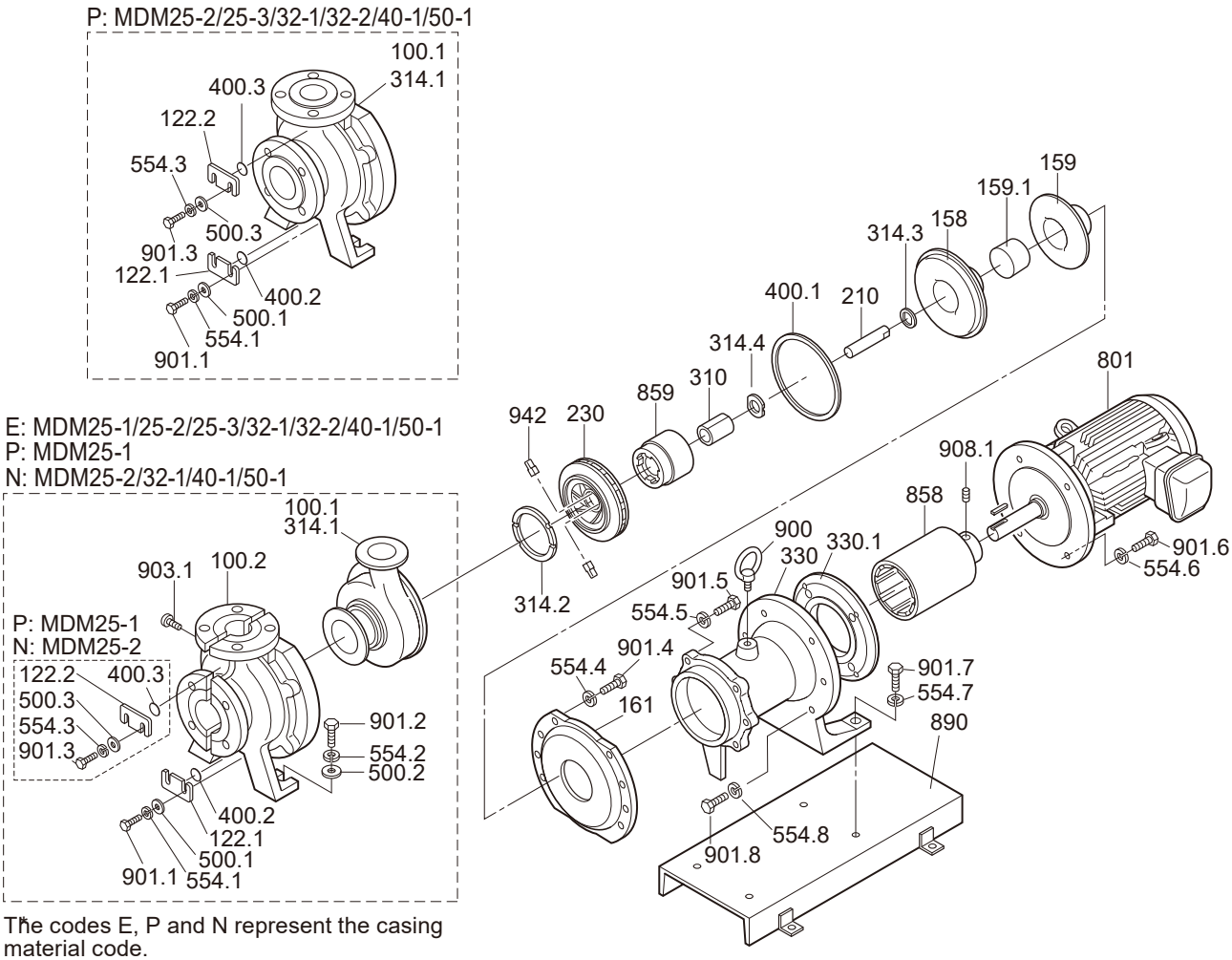

The codes E, P and N represent the casing material code.

E: MDM40-2/50-2

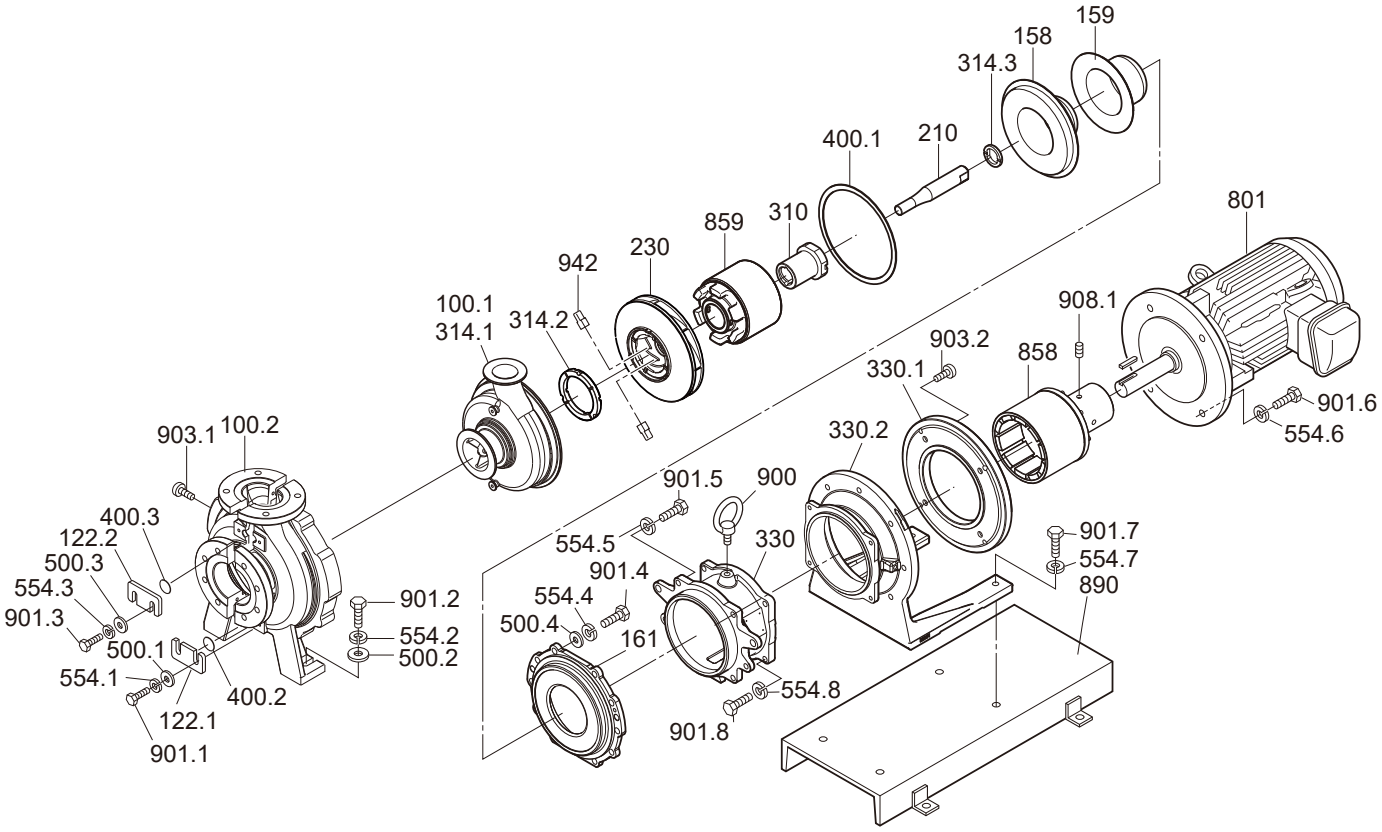

Maintenance

No.	PARTS NAME	WET ENDS/ MOTOR OUTPUT	Q'ty	PARTS CODE				
				MDM25-1	MDM25-2	MDM25-3 7.5kW or below	MDM25-3 11/15kW	MDM32-1
100.1+ 314.1	Front casing	PKK	1	MDM0001				
		EKK	1	MDM0002	MDM0110	MDM0722	MDM0722	MDM0203
		ECF	1	MDM0003	MDM0111	MDM1003	MDM1003	MDM0204
		NKK	1		MDM1118			MDM1101
		PKK	1	MDM0004				
		EKK	1	MDM0005	MDM0112	MDM0723	MDM0723	MDM0205
		ECF	1	MDM0006	MDM0113	MDM1001	MDM1001	MDM0206
		NKK	1		MDM1115			MDM1102
100.1+ 314.1	Front casing unit	PKK	1		MDM0499	MDM0879	MDM0882	MDM0503
		PKK	1		MDM0509	MDM0880	MDM0883	MDM0504
100.2+ 903.1	Cover unit	PKK/NKK	1	MDM0501	MDM1120			MDM1104
		EKK/ECF	1	MDM0502	MDM0500	MDM0881	MDM0884	MDM0505
122.1	Drain plate		1	MDM0009	MDM0009	MDM0009	MDM0009	MDM0009
122.2	Air vent plate	PKK	1	MDM0009	MDM0009	MDM0009	MDM0009	MDM0009
		NKK	1		MDM0009			
		EKK/ECF	1					
158	Rear casing	PKK/NKK	1	MDM0010	MDM0117	MDM0730	MDM0730	MDM0210
		PKK/EKK/ECF	1			MDM0731	MDM0731	
		EKK/ECF	1	MDM0011	MDM0118	MDM0732	MDM0732	MDM0211
159	Rear casing cover	FRP	1	MDM0012	MDM0119	MDM0733	MDM0733	MDM0212
159.1	Reinforce ring	FRP	1			MDM0734	MDM0734	
159+ 159.1	Rear casing cover unit	H	1			MDM0907	MDM0907	
161	Rear casing support		1	MDM0013	MDM1470	MDM0852	MDM0852	MDM0213
210	Spindle	PKK/NKK/EKK	1	MDM0014	MDM0121	MDM0372	MDM0372	MDM0121
		ECF	1	MDM0015	MDM0122	MDM0373	MDM0373	MDM0122
230	Impeller	See the Impeller Parts List pages.						
230+ 314.2	Impeller assembly							
230+ 310+ 314.2+ 314.4+ 859+ 942	Impeller-Magnet capsule assembly							
310	Bearing	PKK/NKK/EKK	1	MDM0016	MDM0123	MDM0735	MDM0735	MDM0123
		ECF	1	MDM0017	MDM0124	MDM0950	MDM0950	MDM0124
314.2	Mouth ring	PKK/NKK/EKK	1	MDM0018	MDM0018	MDM0488	MDM0488	MDM0018
		ECF	1	MDM0019	MDM0019	MDM0951	MDM0951	MDM0019
314.3	Rear thrust ring	EKK/ECF	1	MDM0020	MDM0125	MDM0378	MDM0378	MDM0125
		PKK/NKK	1	MDM0613	MDM0614	MDM0615	MDM0615	MDM0614
314.4	Rear ring	PKK/NKK/EKK	1	MDM0021	MDM0126	MDM0126	MDM0126	MDM0126
		ECF	1	MDM0022	MDM0127	MDM0127	MDM0127	MDM0127

PARTS CODE							WET ENDS/ MOTOR OUTPUT	NOTES
MDM32-2 7.5kW or below	MDM32-2 11/15kW	MDM40-1	MDM40-2	MDM50-1 5.5/7.5kW	MDM50-1 11/15kW	MDM50-2		
							PKK	w/ Drain holes
MDM0869	MDM0869	MDM0279	MDM1187	MDM0366	MDM0366	MDM1180	EKK	
MDM1002	MDM1002	MDM0280	MDM1188	MDM0367	MDM0367	MDM1181	ECF	
		MDM1160		MDM1165	MDM1165		NKK	
							PKK	w/o Drain holes
MDM0870	MDM0870	MDM0281	MDM1189	MDM0368	MDM0368	MDM1182	EKK	
MDM1000	MDM1000	MDM0282	MDM1190	MDM0369	MDM0369	MDM1183	ECF	
		MDM1159		MDM1164	MDM1164		NKK	
MDM0885	MDM0888	MDM0506		MDM0493	MDM0496		PKK	w/ Drain holes
MDM0886	MDM0889	MDM0507		MDM0494	MDM0497		PKK	w/o Drain holes
		MDM1161		MDM1166	MDM1169		PKK/NKK	
MDM0887	MDM0890	MDM0508	MDM1192	MDM1110	MDM1111	MDM1185	EKK/ECF	
MDM0009	MDM0009	MDM0009	MDM0009	MDM0009	MDM0009	MDM0009		
MDM0009	MDM0009	MDM0009		MDM0009	MDM0009		PKK	
							NKK	
			MDM0009			MDM0009	EKK/ECF	
MDM0370	MDM0370	MDM0210		MDM0370	MDM0370		PKK/NKK	
MDM0877	MDM0877						PKK/EKK/ECF	High temp type
MDM0371	MDM0371	MDM0211	MDM1322	MDM0371	MDM0371	MDM1322	EKK/ECF	
MDM0119	MDM0119	MDM0212	MDM1323	MDM0119	MDM0119	MDM1323	FRP	
MDM0734	MDM0734						FRP	High temp type
MDM0908	MDM0908						H	
MDM0878	MDM0878	MDM0213	MDM1326	MDM1470	MDM1470	MDM1326		
MDM0372	MDM0372	MDM0121	MDM1324	MDM0372	MDM0372	MDM1324	PKK/NKK/EKK	
MDM0373	MDM0373	MDM0122	MDM1325	MDM0373	MDM0373	MDM1325	ECF	
See the Impeller Parts List pages.								
MDM0735	MDM0735	MDM0123	MDM1312	MDM0374	MDM0374	MDM1312	PKK/NKK/EKK	
MDM0950	MDM0950	MDM0124	MDM1313	MDM0375	MDM0375	MDM1313	ECF	
MDM0488	MDM0488	MDM0488	MDM1251	MDM0376	MDM0376	MDM1251	PKK/NKK/EKK	
MDM0951	MDM0951	MDM0489	MDM1252	MDM0377	MDM0377	MDM1252	ECF	
MDM0378	MDM0378	MDM0125	MDM0378	MDM0378	MDM0378	MDM0378	EKK/ECF	
MDM0615	MDM0615	MDM0614		MDM0615	MDM0615		PKK/NKK	
MDM0126	MDM0126	MDM0126		MDM0126	MDM0126		PKK/NKK/EKK	
MDM0127	MDM0127	MDM0127		MDM0127	MDM0127		ECF	

No.	PARTS NAME	WET ENDS/ MOTOR OUTPUT	Q'ty	PARTS CODE				
				MDM25-1	MDM25-2	MDM25-3 7.5kW or below	MDM25-3 11/15kW	MDM32-1
330+ 900	Foot support	F015/F022	1	MDM0023				
		F040	1		MDM0128			MDM0128
		F055/F075	1		MDM0129	MDM0129		MDM0129
		F110/F150/*F185	1				MDM0467	
		F220/F300	1					
		F004-4P	1	MDM0616				
		F007-4P	1	MDM0023				
		F015-4P	1		MDM0620	MDM0620		MDM0620
		F022/F040-4P	1		MDM0128	MDM0128		MDM0128
		F055-4P	1			MDM0129		
		F075/F110/F150-4P						
330.1	Motor adapter	F055/F075	1					
		F300	1					
		F004-4P	1	MDM0617				
		F015-4P	1		MDM0621	MDM0621		MDM0621
		F055/F075-4P	1					
400.1	Gasket	PTFE	1	MDM0024	MDM0130	MDM0736	MDM0736	MDM0214
400.2	Drain gasket	PTFE	1	MDM0025	MDM0025	MDM0025	MDM0025	MDM0025
400.3	Air vent gasket	PKK/PTFE	1	MDM0025	MDM0025	MDM0025	MDM0025	MDM0025
		NKK	1		MDM0025			
500.1	Plain washer		2	MDM0026	MDM0026	MDM0026	MDM0026	MDM0026
500.2	Plain washer		2	MDM0027	MDM0027	MDM0027	MDM0027	MDM0027
500.3	Plain washer		2	MDM0026	MDM0026	MDM0026	MDM0026	MDM0026
500.4	Plain washer		10					
554.1	Spring washer		2	MDM0028	MDM0028	MDM0028	MDM0028	MDM0028
554.2	Spring washer		2	MDM0029	MDM0029	MDM0029	MDM0029	MDM0029
554.3	Spring washer		2	MDM0028	MDM0028	MDM0028	MDM0028	MDM0028
554.4	Spring washer		6/8/10	MDM0030	MDM0029	MDM0490	MDM0490	MDM0029
554.5	Spring washer		4	MDM0030	MDM0029	MDM0029	MDM0029	MDM0029
554.6	Spring washer	F015/F022	4	MDM0030				
		F040/F055/F075	4		MDM0029	MDM0029		MDM0029
		F055/F075	4					
		F110/F150/*F185	4				MDM0490	
		F220/F300	4					
		F004-4P	4	MDM0028				
		F007-4P	4	MDM0030				
		F015-4P	4		MDM0030	MDM0030		MDM0030
		F022/F040-4P	4		MDM0029	MDM0029		MDM0029
		F055-4P	4			MDM0029		
		F075-4P	4					
		F110/F150-4P	4					

PARTS CODE							WET ENDS/ MOTOR OUTPUT	NOTES
MDM32-2 7.5kW or below	MDM32-2 11/15kW	MDM40-1	MDM40-2	MDM50-1 5.5/7.5kW	MDM50-1 11/15kW	MDM50-2		
							F015/F022	
		MDM0128					F040	
MDM0129		MDM0129	MDM1327	MDM0129		MDM1327	F055/F075	
	MDM0467		MDM1327		MDM0467	MDM1327	F110/F150/*F185	*MDM40-2/50-2 only
			MDM1327			MDM1327	F220/F300	
							F004-4P	
							F007-4P	
MDM0620		MDM0620		MDM0620			F015-4P	
MDM0128		MDM0128		MDM0128			F022/F040-4P	
MDM0129			MDM1327	MDM0129		MDM1327	F055-4P	
			MDM1327			MDM1327	F075/F110/F150-4P	
			MDM1329			MDM1329	F055/F075	
			MDM1330			MDM1330	F300	
							F004-4P	
MDM0621		MDM0621		MDM0621			F015-4P	
			MDM1329			MDM1329	F055/F075-4P	
MDM0130	MDM0130	MDM0214	MDM1194	MDM0130	MDM0130	MDM1194	PTFE	
MDM0025	MDM0025	MDM0025	MDM0025	MDM0025	MDM0025	MDM0025	PTFE	
MDM0025	MDM0025	MDM0025	MDM0025	MDM0025	MDM0025	MDM0025	PKK/PTFE	
							NKK	
MDM0026	MDM0026	MDM0026	MDM0026	MDM0026	MDM0026	MDM0026		
MDM0027	MDM0027	MDM0027	MDM0027	MDM0027	MDM0027	MDM0027		
MDM0026	MDM0026	MDM0026	MDM0026	MDM0026	MDM0026	MDM0026		
			MDM1195			MDM1195		
MDM0028	MDM0028	MDM0028	MDM0028	MDM0028	MDM0028	MDM0028		
MDM0029	MDM0029	MDM0029	MDM0029	MDM0029	MDM0029	MDM0029		
MDM0028	MDM0028	MDM0028	MDM0028	MDM0028	MDM0028	MDM0028		
MDM0490	MDM0490	MDM0029	MDM0490	MDM0290	MDM0029	MDM0490		MDM25-1: 6 MDM25-3/32-2/ 40-2/50-2: 10
MDM0029	MDM0029	MDM0029	MDM0029	MDM0029	MDM0029	MDM0029		
							F015/F022	
MDM0029		MDM0029		MDM0029			F040/F055/F075	
			MDM0029			MDM0029	F055/F075	
	MDM0490		MDM0490		MDM0490	MDM0490	F110/F150/*F185	*MDM40-2/50-2 only
			MDM0490			MDM0490	F220/F300	
							F004-4P	
							F007-4P	
MDM0030		MDM0030		MDM0030			F015-4P	
MDM0029		MDM0029		MDM0029			F022/F040-4P	
MDM0029			MDM0029	MDM0029		MDM0029	F055-4P	
			MDM0029			MDM0029	F075-4P	
			MDM0490			MDM0490	F110/F150-4P	

No.	PARTS NAME	WET ENDS/ MOTOR OUTPUT	Q'ty	PARTS CODE				
				MDM25-1	MDM25-2	MDM25-3 7.5kW or below	MDM25-3 11/15kW	MDM32-1
554.7	Spring washer		2	MDM0029	MDM0029	MDM0029	MDM0029	MDM0029
554.8	Spring washer	F004-4P	4	MDM0028				
		F015-4P	4		MDM0030	MDM0030		MDM0030
			4					
801	Motor		1					
858+ 908.1	Drive magnet unit	F015	1	MDM0031				
		F022	1	MDM0032				
		F040	1		MDM0131			MDM0131
		F055	1		MDM0132	MDM0286		MDM0132
		F075	1		MDM0286	MDM0286		MDM0286
		F110	1				MDM0738	
		F150	1				MDM0738	
		F185	1					
		F220	1					
		F300	1					
		F004-4P	1	MDM0618				
		F007-4P	1	MDM0627				
		F015-4P	1		MDM0622	MDM0622		MDM0622
		F022-4P	1		MDM0623	MDM0623		MDM0623
		F040-4P	1		MDM0624	MDM0624		MDM0624
		F055-4P	1			MDM0737		
		F075-4P	1					
		F110-4P	1					
		F150-4P	1					
859	Magnet capsule unit	PKK-F015	1	MDM0033				
		PKK-F022	1	MDM0033				
		PKK/NKK-F040	1		MDM0133			MDM0133
		PKK/NKK-F055	1		MDM0133	MDM0287		MDM0133
		PKK/NKK-F075	1		MDM0287	MDM0287		MDM0287
		PKK/NKK-F110	1				MDM0469	
		PKK/NKK-F150	1				MDM0469	
		PKK-F004-4P	1	MDM0033				
		PKK-F007-4P	1	MDM0033				
		PKK/NKK-F015-4P	1		MDM0133	MDM0133		MDM0133
		PKK/NKK-F022-4P	1		MDM0133	MDM0133		MDM0133
		PKK/NKK-F040-4P	1		MDM0287	MDM0287		MDM0287
		PKK/NKK-F055-4P	1			MDM0469		
		EKK/ECF-F015	1	MDM0034				
		EKK/ECF-F022	1	MDM0034				
		EKK/ECF-F040	1		MDM0134			MDM0134
		EKK/ECF-F055	1		MDM0134	MDM0288		MDM0134
		EKK/ECF-F075	1		MDM0288	MDM0288		MDM0288

PARTS CODE							WET ENDS/ MOTOR OUTPUT	NOTES
MDM32-2 7.5kW or below	MDM32-2 11/15kW	MDM40-1	MDM40-2	MDM50-1 5.5/7.5kW	MDM50-1 11/15kW	MDM50-2		
MDM0029	MDM0029	MDM0029	MDM0029	MDM0029	MDM0029	MDM0029		
							F004-4P	
MDM0030		MDM0030		MDM0030			F015-4P	
			MDM0029			MDM0029		
							F015	
							F022	
		MDM0131					F040	
MDM0286		MDM0132	MDM1317	MDM0286		MDM1317	F055	
MDM0286		MDM0286	MDM1317	MDM0286		MDM1317	F075	
	MDM0738		MDM1318		MDM0738	MDM1318	F110	
	MDM0738		MDM1315		MDM0738	MDM1315	F150	
			MDM1315			MDM1315	F185	
			MDM1339			MDM1339	F220	
			MDM1337			MDM1337	F300	
							F004-4P	
							F007-4P	
MDM0622		MDM0622		MDM0622			F015-4P	
MDM0623		MDM0623		MDM0623			F022-4P	
MDM0624		MDM0624		MDM0624			F040-4P	
MDM0737			MDM1317	MDM0737		MDM1317	F055-4P	
			MDM1314			MDM1314	F075-4P	
			MDM1315			MDM1315	F110-4P	
			MDM1315			MDM1315	F150-4P	
							PKK-F015	
							PKK-F022	
		MDM0133					PKK/NKK-F040	
MDM0287		MDM0133		MDM0287			PKK/NKK-F055	
MDM0287		MDM0287		MDM0287			PKK/NKK-F075	
	MDM0469				MDM0469		PKK/NKK-F110	
	MDM0469				MDM0469		PKK/NKK-F150	
							PKK-F004-4P	
							PKK-F007-4P	
MDM0133		MDM0133		MDM0133			PKK/NKK-F015-4P	
MDM0133		MDM0133		MDM0133			PKK/NKK-F022-4P	
MDM0287		MDM0287		MDM0287			PKK/NKK-F040-4P	
MDM0469				MDM0469			PKK/NKK-F055-4P	
							EKK/ECF-F015	
							EKK/ECF-F022	
		MDM0134					EKK/ECF-F040	
MDM0288		MDM0134	MDM1311	MDM0288		MDM1311	EKK/ECF-F055	
MDM0288		MDM0288	MDM1311	MDM0288		MDM1311	EKK/ECF-F075	

No.	PARTS NAME	WET ENDS/ MOTOR OUTPUT	Q'ty	PARTS CODE				
				MDM25-1	MDM25-2	MDM25-3 7.5kW or below	MDM25-3 11/15kW	MDM32-1
859	Magnet capsule unit	EKK/ECF-F110	1				MDM0470	
		EKK/ECF-F150	1				MDM0470	
		EKK/ECF-F185	1					
		EKK/ECF-F220	1					
		EKK/ECF-F300	1					
		EKK/ECF-F004-4P	1	MDM0034				
		EKK/ECF-F007-4P	1	MDM0034				
		EKK/ECF-F015-4P	1		MDM0134	MDM0134		MDM0134
		EKK/ECF-F022-4P	1		MDM0134	MDM0134		MDM0134
		EKK/ECF-F040-4P	1		MDM0288	MDM0288		MDM0288
		EKK/ECF-F055-4P	1			MDM0470		
		EKK/ECF-F075-4P	1					
		EKK/ECF-F110-4P	1					
		EKK/ECF-F150-4P	1					
890	Base plate		1	MDM0035	MDM0135	MDM0135	MDM0471	MDM0135
900	Eye bolt		1	MDM0036	MDM0036	MDM0036	MDM0036	MDM0036
901.1	Hex. head bolt		2	MDM0037	MDM0037	MDM0037	MDM0037	MDM0037
901.2	Hex. head bolt		2	MDM0042	MDM0555	MDM0555	MDM0555	MDM0555
901.3	Hex. head bolt		2	MDM0037	MDM0037	MDM0037	MDM0037	MDM0037
901.4	Hex. head bolt		6/8/10	MDM0039	MDM0137	MDM0491	MDM0491	MDM0137
901.5	Hex. head bolt		4	MDM0040	MDM0136	MDM0136	MDM0136	MDM0136
901.6	Hex. head bolt	F015/F022	4	MDM0040				
		F040	4		MDM0555			MDM0555
		F055/F075	4		MDM0137	MDM0137		MDM0137
		F110/F150/*F185	4				MDM0491	
		F220/F300	4					
		F004-4P	4	MDM0619				
		F007-4P	4	MDM0041				
		F015-4P	4		MDM0041	MDM0041		MDM0041
		F022/F040-4P	4		MDM0555	MDM0555		MDM0555
		F055-4P	4			MDM0137		
		F075-4P	4					
		F110/F150-4P	4					
901.7	Hex. head bolt		2	MDM0042	MDM0555	MDM0555	MDM0555	MDM0555
901.8	Hex. head bolt	F004-4P	4	MDM0698				
		F015-4P	4		MDM0625	MDM0625		MDM0625
			4					
903.1	Hex. soch head bolt	PKK	5	MDM0043				
		EKK/ECF	5	MDM0043	MDM0043	MDM0043	MDM0043	MDM0043
		NKK	5		MDM0043			MDM0043

PARTS CODE							WET ENDS/ MOTOR OUTPUT	NOTES
MDM32-2 7.5kW or below	MDM32-2 11/15kW	MDM40-1	MDM40-2	MDM50-1 5.5/7.5kW	MDM50-1 11/15kW	MDM50-2		
	MDM0470		MDM1311		MDM0470	MDM1311	EKK/ECF-F110	
	MDM0470		MDM1310		MDM0470	MDM1310	EKK/ECF-F150	
			MDM1310			MDM1310	EKK/ECF-F185	
			MDM1310			MDM1310	EKK/ECF-F220	
			MDM1310			MDM1310	EKK/ECF-F300	
							EKK/ECF-F004-4P	
							EKK/ECF-F007-4P	
MDM0134		MDM0134		MDM0134			EKK/ECF-F015-4P	
MDM0134		MDM0134		MDM0134			EKK/ECF-F022-4P	
MDM0288		MDM0288		MDM0288			EKK/ECF-F040-4P	
MDM0470			MDM1311	MDM0470		MDM1311	EKK/ECF-F055-4P	
			MDM1310			MDM1310	EKK/ECF-F075-4P	
			MDM1310			MDM1310	EKK/ECF-F110-4P	
			MDM1310			MDM1310	EKK/ECF-F150-4P	
MDM0135	MDM0471	MDM0135	MDM1332	MDM0135	MDM0471	MDM1332		
MDM0036	MDM0036	MDM0036	MDM1338		MDM0036	MDM1338		
MDM0037	MDM0037	MDM0037	MDM0037	MDM0037	MDM0037	MDM0037		
MDM0555	MDM0555	MDM0555	MDM0555	MDM0555	MDM0555	MDM0555		
MDM0037	MDM0037	MDM0037	MDM0037	MDM0037	MDM0037	MDM0037		
MDM0491	MDM0491	MDM0137	MDM0491	MDM0137	MDM0137	MDM0491		MDM25-1: 6 MDM25-3/32-2/40-2/50-2: 10
MDM0136	MDM0136	MDM0136	MDM0555	MDM0136	MDM0136	MDM0555		
							F015/F022	
		MDM0555					F040	
MDM0137		MDM0137	MDM0555	MDM0137		MDM0555	F055/F075	
	MDM0491		MDM0491		MDM0491	MDM0491	F110/F150/*F185	*MDM40-2/50-2 only
			MDM0491			MDM0491	F220/F300	
							F004-4P	
							F007-4P	
MDM0041		MDM0041		MDM0041			F015-4P	
MDM0555		MDM0555		MDM0555			F022/F040-4P	
MDM0137			MDM0555	MDM0137		MDM0555	F055-4P	
			MDM0555			MDM0555	F075-4P	
			MDM0491			MDM0491	F110/F150-4P	
MDM0555	MDM0555	MDM0555	MDM0555	MDM0555	MDM0555	MDM0555		
							F004-4P	
MDM0625		MDM0625		MDM0625			F015-4P	
			MDM0555			MDM0555		
							PKK	
MDM0043	MDM0043	MDM0043	MDM0043	MDM0043	MDM0043	MDM0043	EKK/ECF	
		MDM0043		MDM0043	MDM0043		NKK	

No.	PARTS NAME	WET ENDS/ MOTOR OUTPUT	Q'ty	PARTS CODE				
				MDM25-1	MDM25-2	MDM25-3 7.5kW or below	MDM25-3 11/15kW	MDM32-1
903.2	Hex. soch head bolt	F055/F075	4					
		F300	4					
		F055/F075-4P	4					
908.1	Hex. head set screw		2	MDM0044	MDM0044	MDM0044	MDM0044	MDM0044
		F055/F075	2					
		F110/F150/F185/ F220/F300	2					
		F055/F075-4P	2					
		F110/F150-4P	2					
942	Pin, Impeller		2	MDM0045	MDM0138	MDM0138	MDM0138	MDM0138

PARTS CODE							WET ENDS/ MOTOR OUTPUT	NOTES
MDM32-2 7.5kW or below	MDM32-2 11/15kW	MDM40-1	MDM40-2	MDM50-1 5.5/7.5kW	MDM50-1 11/15kW	MDM50-2		
			MDM1331			MDM1331	F055/F075	
			MDM1331			MDM1331	F300	
			MDM1331			MDM1331	F055/F075-4P	
MDM0044	MDM0044	MDM0044		MDM0044	MDM0044			
			MDM1320			MDM1320	F055/F075	
			MDM1321			MDM1321	F110/F150/F185/ F220/F300	
			MDM1320			MDM1320	F055/F075-4P	
			MDM1321			MDM1321	F110/F150-4P	
MDM0138	MDM0138	MDM0138	MDM0138	MDM0138	MDM0138	MDM0138		

Impeller part list

If you need the new impeller, contact us with the pump model code and the MFG #. They are shown on the spec label of the pump. Note the "Nominal" impeller O.D. may be different from the actual impeller O.D. as some adjustment in our factory is needed to optimize the pump performance.

■ MDM25-1

MODEL	No.	PARTS NAME	IMPELLER O.D.	MOTOR OUTPUT	Q'ty	PARTS CODE		
						PKK	EKK	ECF
MDM25-1	230	Impeller	165		1	MDM0046	MDM0067	
			160		1	MDM0047	MDM0068	
			150		1	MDM0048	MDM0069	
			140		1	MDM0049	MDM0070	
			130		1	MDM0050	MDM0071	
			120		1	MDM0051	MDM0072	
			110		1	MDM0052	MDM0073	
			100		1	MDM0084	MDM0109	
			170	4P	1	MDM0628	MDM0632	
	230+ 314.2	Impeller assembly	165		1	MDM0053	MDM0074	MDM0093
			160		1	MDM0054	MDM0075	MDM0094
			150		1	MDM0055	MDM0076	MDM0095
			140		1	MDM0056	MDM0077	MDM0096
			130		1	MDM0057	MDM0078	MDM0097
			120		1	MDM0058	MDM0079	MDM0098
			110		1	MDM0059	MDM0080	MDM0099
			100		1	MDM0083	MDM0081	MDM0100
			170	4P	1	MDM0629	MDM0633	MDM0637
	230+ 310+ 314.2+ 314.4+ 859+ 942	Impeller-Magnet capsule assembly	165	1.5/2.2kW	1	MDM0060	MDM0085	MDM0101
			160	1.5/2.2kW	1	MDM0061	MDM0086	MDM0102
			150	1.5/2.2kW	1	MDM0062	MDM0087	MDM0103
			140	1.5/2.2kW	1	MDM0063	MDM0088	MDM0104
			130	1.5/2.2kW	1	MDM0064	MDM0089	MDM0105
			120	1.5/2.2kW	1	MDM0065	MDM0090	MDM0106
			110	1.5/2.2kW	1	MDM0066	MDM0091	MDM0107
			100	1.5/2.2kW	1	MDM0082	MDM0092	MDM0108
			170	0.75/1.5kW-4P	1	MDM0630	MDM0634	MDM0635

■ MDM25-2

MODEL	No.	PARTS NAME	IMPELLER O.D.	MOTOR OUTPUT	Q'ty	PARTS CODE		
						PKK/NKK	EKK	ECF
MDM25-2	230	Impeller	195		1	MDM0139	MDM0163	
			190		1	MDM0140	MDM0164	
			180		1	MDM0141	MDM0165	
			170		1	MDM0142	MDM0166	
			160		1	MDM0143	MDM0167	
			150		1	MDM0144	MDM0168	
			140		1	MDM0145	MDM0169	
			130		1	MDM0146	MDM0170	
			200	4P	1	MDM0640	MDM0645	
	230+ 314.2	Impeller assembly	195		1	MDM0147	MDM0171	MDM0187
			190		1	MDM0148	MDM0172	MDM0188
			180		1	MDM0149	MDM0173	MDM0189
			170		1	MDM0150	MDM0174	MDM0190
			160		1	MDM0151	MDM0175	MDM0191
			150		1	MDM0152	MDM0176	MDM0192
			140		1	MDM0153	MDM0177	MDM0193
			130		1	MDM0154	MDM0178	MDM0194
			200	4P	1	MDM0641	MDM0646	MDM0650
	230+ 310+ 314.2+ 314.4+ 859+ 942	Impeller-Magnet capsule assembly	195	4.0/5.5kW	1	MDM0155	MDM0179	MDM0195
			190	4.0/5.5kW	1	MDM0156	MDM0180	MDM0196
			180	4.0/5.5kW	1	MDM0157	MDM0181	MDM0197
			170	4.0/5.5kW	1	MDM0158	MDM0182	MDM0198
			160	4.0/5.5kW	1	MDM0159	MDM0183	MDM0199
			150	4.0/5.5kW	1	MDM0160	MDM0184	MDM0200
			140	4.0/5.5kW	1	MDM0161	MDM0185	MDM0201
			130	4.0/5.5kW	1	MDM0162	MDM0186	MDM0202
			195	7.5kW	1	MDM0556	MDM0564	MDM0572
			190	7.5kW	1	MDM0557	MDM0565	MDM0573
			180	7.5kW	1	MDM0558	MDM0566	MDM0574
			170	7.5kW	1	MDM0559	MDM0567	MDM0575
			160	7.5kW	1	MDM0560	MDM0568	MDM0576
			150	7.5kW	1	MDM0561	MDM0569	MDM0577
			140	7.5kW	1	MDM0562	MDM0570	MDM0578
			130	7.5kW	1	MDM0563	MDM0571	MDM0579
			200	1.5/2.2kW-4P	1	MDM0642	MDM0647	MDM0649
			200	4.0kW-4P	1	MDM0643	MDM0648	MDM0651

■ MDM25-3 (except "PKK" wet ends and "H" liquid temperature type)

MODEL	No.	PARTS NAME	IMPELLER O.D.	MOTOR OUTPUT	Q'ty	PARTS CODE		
						PKK	EKK	ECF
MDM25-3	230	Impeller	225		1	MDM0740	MDM0764	
			220		1	MDM0741	MDM0765	
			210		1	MDM0742	MDM0766	
			200		1	MDM0743	MDM0767	
			190		1	MDM0744	MDM0768	
			180		1	MDM0745	MDM0769	
			170		1	MDM0746	MDM0770	
			160		1	MDM0747	MDM0771	
	230+ 314.2	Impeller assembly	225		1	MDM0853	MDM0772	MDM0918
			220		1	MDM0854	MDM0773	MDM0919
			210		1	MDM0855	MDM0774	MDM0920
			200		1	MDM0856	MDM0775	MDM0921
			190		1	MDM0857	MDM0776	MDM0922
			180		1	MDM0858	MDM0777	MDM0923
			170		1	MDM0859	MDM0778	MDM0924
			160		1	MDM0860	MDM0779	MDM0925
	230+ 310+ 314.2+ 314.4+ 859+ 942	Impeller-Magnet capsule assembly	225	5.5/7.5kW	1	MDM0756	MDM0788	MDM0934
			220	5.5/7.5kW	1	MDM0757	MDM0789	MDM0935
			210	5.5/7.5kW	1	MDM0758	MDM0790	MDM0936
			200	5.5/7.5kW	1	MDM0759	MDM0791	MDM0937
			190	5.5/7.5kW	1	MDM0760	MDM0792	MDM0938
			180	5.5/7.5kW	1	MDM0761	MDM0793	MDM0939
			170	5.5/7.5kW	1	MDM0762	MDM0794	MDM0940
			160	5.5/7.5kW	1	MDM0763	MDM0795	MDM0941
			225	11/15kW	1	MDM0861	MDM0796	MDM0942
			220	11/15kW	1	MDM0862	MDM0797	MDM0943
			210	11/15kW	1	MDM0863	MDM0798	MDM0944
			200	11/15kW	1	MDM0864	MDM0799	MDM0945
			190	11/15kW	1	MDM0865	MDM0800	MDM0946
			180	11/15kW	1	MDM0866	MDM0801	MDM0947
			170	11/15kW	1	MDM0867	MDM0802	MDM0948
			160	11/15kW	1	MDM0868	MDM0803	MDM0949
			225	1.5/2.2kW-4P	1	MDM0748	MDM0780	MDM0926
			225	4.0kW-4P	1	MDM0756	MDM0788	MDM0934
			225	5.5kW-4P	1	MDM0861	MDM0796	MDM0942

■ MDM25-3 (only "PKK" wet ends and "H" liquid temperature type)

MODEL	No.	PARTS NAME	IMPELLER O.D.	MOTOR OUTPUT	Q'ty	PARTS CODE PKK-H	NOTES
MDM25-3	230+ 859	Impeller-Magnet capsule assembly	225	5.5/7.5kW	1	MDM0812	Welded impeller-Magnet capsule are not detachable.
			220	5.5/7.5kW	1	MDM0813	
			210	5.5/7.5kW	1	MDM0814	
			200	5.5/7.5kW	1	MDM0815	
			190	5.5/7.5kW	1	MDM0816	
			180	5.5/7.5kW	1	MDM0817	
			170	5.5/7.5kW	1	MDM0818	
			160	5.5/7.5kW	1	MDM0819	
			225	11/15kW	1	MDM0820	
			220	11/15kW	1	MDM0821	
			210	11/15kW	1	MDM0822	
			200	11/15kW	1	MDM0823	
			190	11/15kW	1	MDM0824	
			180	11/15kW	1	MDM0825	
			170	11/15kW	1	MDM0826	
			160	11/15kW	1	MDM0827	
			225	1.5/2.2kW-4P	1	MDM0804	
			225	4.0kW-4P	1	MDM0812	
			225	5.5kW-4P	1	MDM0820	
	230+ 310+ 314.2+ 314.4+ 859+ 942	Impeller-Magnet capsule assembly	225	5.5/7.5kW	1	MDM0836	
			220	5.5/7.5kW	1	MDM0837	
			210	5.5/7.5kW	1	MDM0838	
			200	5.5/7.5kW	1	MDM0839	
			190	5.5/7.5kW	1	MDM0840	
			180	5.5/7.5kW	1	MDM0841	
			170	5.5/7.5kW	1	MDM0842	
			160	5.5/7.5kW	1	MDM0843	
			225	11/15kW	1	MDM0844	
			220	11/15kW	1	MDM0845	
			210	11/15kW	1	MDM0846	
			200	11/15kW	1	MDM0847	
			190	11/15kW	1	MDM0848	
			180	11/15kW	1	MDM0849	
			170	11/15kW	1	MDM0850	
			160	11/15kW	1	MDM0851	
			225	1.5/2.2kW-4P	1	MDM0828	
			225	4.0kW-4P	1	MDM0836	
			225	5.5kW-4P	1	MDM0844	

■ MDM32-1

MODEL	No.	PARTS NAME	IMPELLER O.D.	MOTOR OUTPUT	Q'ty	PARTS CODE		
						PKK/NKK	EKK	ECF
MDM32-1	230	Impeller	165		1	MDM0215	MDM0239	
			160		1	MDM0216	MDM0240	
			150		1	MDM0217	MDM0241	
			145		1	MDM0218	MDM0242	
			140		1	MDM0219	MDM0243	
			130		1	MDM0220	MDM0244	
			120		1	MDM0221	MDM0245	
			110		1	MDM0222	MDM0246	
			170	4P	1	MDM0654	MDM0659	
	230+ 314.2	Impeller assembly	165		1	MDM0223	MDM0247	MDM0263
			160		1	MDM0224	MDM0248	MDM0264
			150		1	MDM0225	MDM0249	MDM0265
			145		1	MDM0226	MDM0250	MDM0266
			140		1	MDM0227	MDM0251	MDM0267
			130		1	MDM0228	MDM0252	MDM0268
			120		1	MDM0229	MDM0253	MDM0269
			110		1	MDM0230	MDM0254	MDM0270
			170	4P	1	MDM0655	MDM0668	MDM0664
	230+ 310+ 314.2+ 314.4+ 859+ 942	Impeller-Magnet capsule assembly	165	4.0/5.5kW	1	MDM0231	MDM0255	MDM0271
			160	4.0/5.5kW	1	MDM0232	MDM0256	MDM0272
			150	4.0/5.5kW	1	MDM0233	MDM0257	MDM0273
			145	4.0/5.5kW	1	MDM0234	MDM0258	MDM0274
			140	4.0/5.5kW	1	MDM0235	MDM0259	MDM0275
			130	4.0/5.5kW	1	MDM0236	MDM0260	MDM0276
			120	4.0/5.5kW	1	MDM0237	MDM0261	MDM0277
			110	4.0/5.5kW	1	MDM0238	MDM0262	MDM0278
			165	7.5kW	1	MDM0580	MDM0588	MDM0596
			160	7.5kW	1	MDM0581	MDM0589	MDM0597
			150	7.5kW	1	MDM0582	MDM0590	MDM0598
			145	7.5kW	1	MDM0583	MDM0591	MDM0599
			140	7.5kW	1	MDM0584	MDM0592	MDM0600
			130	7.5kW	1	MDM0585	MDM0593	MDM0601
			120	7.5kW	1	MDM0586	MDM0594	MDM0602
			110	7.5kW	1	MDM0587	MDM0595	MDM0603
			170	1.5/2.2kW-4P	1	MDM0656	MDM0661	MDM0663
			170	4.0kW-4P	1	MDM0657	MDM0662	MDM0665

■ MDM32-2 (except "PKK" wet ends and "H" liquid temperature type)

MODEL	No.	PARTS NAME	IMPELLER O.D.	MOTOR OUTPUT	Q'ty	PARTS CODE		
						PKK	EKK	ECF
MDM32-2	230	Impeller	225		1	MDM0740	MDM0764	
			220		1	MDM0741	MDM0765	
			210		1	MDM0742	MDM0766	
			200		1	MDM0743	MDM0767	
			190		1	MDM0744	MDM0768	
			180		1	MDM0745	MDM0769	
			170		1	MDM0746	MDM0770	
			160		1	MDM0747	MDM0771	
	230+ 314.2	Impeller assembly	225		1	MDM0853	MDM0772	MDM0918
			220		1	MDM0854	MDM0773	MDM0919
			210		1	MDM0855	MDM0774	MDM0920
			200		1	MDM0856	MDM0775	MDM0921
			190		1	MDM0857	MDM0776	MDM0922
			180		1	MDM0858	MDM0777	MDM0923
			170		1	MDM0859	MDM0778	MDM0924
			160		1	MDM0860	MDM0779	MDM0925
	230+ 310+ 314.2+ 314.4+ 859+ 942	Impeller-Magnet capsule assembly	225	5.5/7.5kW	1	MDM0756	MDM0788	MDM0934
			220	5.5/7.5kW	1	MDM0757	MDM0789	MDM0935
			210	5.5/7.5kW	1	MDM0758	MDM0790	MDM0936
			200	5.5/7.5kW	1	MDM0759	MDM0791	MDM0937
			190	5.5/7.5kW	1	MDM0760	MDM0792	MDM0938
			180	5.5/7.5kW	1	MDM0761	MDM0793	MDM0939
			170	5.5/7.5kW	1	MDM0762	MDM0794	MDM0940
			160	5.5/7.5kW	1	MDM0763	MDM0795	MDM0941
			225	11/15kW	1	MDM0861	MDM0796	MDM0942
			220	11/15kW	1	MDM0862	MDM0797	MDM0943
			210	11/15kW	1	MDM0863	MDM0798	MDM0944
			200	11/15kW	1	MDM0864	MDM0799	MDM0945
			190	11/15kW	1	MDM0865	MDM0800	MDM0946
			180	11/15kW	1	MDM0866	MDM0801	MDM0947
			170	11/15kW	1	MDM0867	MDM0802	MDM0948
			160	11/15kW	1	MDM0868	MDM0803	MDM0949
			225	1.5/2.2kW-4P	1	MDM0748	MDM0780	MDM0926
			225	4.0kW-4P	1	MDM0756	MDM0788	MDM0934
			225	5.5kW-4P	1	MDM0861	MDM0796	MDM0942

■ MDM32-2 (only "PKK" wet ends and "H" liquid temperature type)

MODEL	No.	PARTS NAME	IMPELLER O.D.	MOTOR OUTPUT	Q'ty	PARTS CODE	NOTES
						PKK-H	
MDM32-2	230+ 859	Impeller-Magnet capsule assembly	225	5.5/7.5kW	1	MDM0812	Welded impeller-Magnet capsule are not detachable.
			220	5.5/7.5kW	1	MDM0813	
			210	5.5/7.5kW	1	MDM0814	
			200	5.5/7.5kW	1	MDM0815	
			190	5.5/7.5kW	1	MDM0816	
			180	5.5/7.5kW	1	MDM0817	
			170	5.5/7.5kW	1	MDM0818	
			160	5.5/7.5kW	1	MDM0819	
			225	11/15kW	1	MDM0820	
			220	11/15kW	1	MDM0821	
			210	11/15kW	1	MDM0822	
			200	11/15kW	1	MDM0823	
			190	11/15kW	1	MDM0824	
			180	11/15kW	1	MDM0825	
			170	11/15kW	1	MDM0826	
			160	11/15kW	1	MDM0827	
			225	1.5/2.2kW-4P	1	MDM0804	
			225	4.0kW-4P	1	MDM0812	
			225	5.5kW-4P	1	MDM0820	
	230+ 310+ 314.2+ 314.4+ 859+ 942	Impeller-Magnet capsule assembly	225	5.5/7.5kW	1	MDM0836	
			220	5.5/7.5kW	1	MDM0837	
			210	5.5/7.5kW	1	MDM0838	
			200	5.5/7.5kW	1	MDM0839	
			190	5.5/7.5kW	1	MDM0840	
			180	5.5/7.5kW	1	MDM0841	
			170	5.5/7.5kW	1	MDM0842	
			160	5.5/7.5kW	1	MDM0843	
			225	11/15kW	1	MDM0844	
			220	11/15kW	1	MDM0845	
			210	11/15kW	1	MDM0846	
			200	11/15kW	1	MDM0847	
			190	11/15kW	1	MDM0848	
			180	11/15kW	1	MDM0849	
			170	11/15kW	1	MDM0850	
			160	11/15kW	1	MDM0851	
			225	1.5/2.2kW-4P	1	MDM0828	
			225	4.0kW-4P	1	MDM0836	
			225	5.5kW-4P	1	MDM0844	

■ MDM40-1

MODEL	No.	PARTS NAME	IMPELLER O.D.	MOTOR OUTPUT	Q'ty	PARTS CODE		
						PKK/NKK	EKK	ECF
MDM40-1	230	Impeller	165		1	MDM0379	MDM0481	
			160		1	MDM0475	MDM0482	
			150		1	MDM0476	MDM0483	
			140		1	MDM0477	MDM0484	
			130		1	MDM0478	MDM0485	
			120		1	MDM0479	MDM0486	
			110		1	MDM0480	MDM0487	
			170	4P	1	MDM0669	MDM0674	
	230+ 314.2	Impeller assembly	165		1	MDM0296	MDM0324	MDM0345
			160		1	MDM0297	MDM0325	MDM0346
			150		1	MDM0298	MDM0326	MDM0347
			140		1	MDM0299	MDM0327	MDM0348
			130		1	MDM0300	MDM0328	MDM0349
			120		1	MDM0301	MDM0329	MDM0350
			110		1	MDM0302	MDM0330	MDM0351
			170	4P	1	MDM0670	MDM0675	MDM0679
	230+ 310+ 314.2+ 314.4+ 859+ 942	Impeller-Magnet capsule assembly	165	4.0/5.5kW	1	MDM0303	MDM0331	MDM0352
			160	4.0/5.5kW	1	MDM0304	MDM0332	MDM0353
			150	4.0/5.5kW	1	MDM0305	MDM0333	MDM0354
			140	4.0/5.5kW	1	MDM0306	MDM0334	MDM0355
			130	4.0/5.5kW	1	MDM0307	MDM0335	MDM0356
			120	4.0/5.5kW	1	MDM0308	MDM0336	MDM0357
			110	4.0/5.5kW	1	MDM0309	MDM0337	MDM0358
			165	7.5kW	1	MDM0310	MDM0338	MDM0359
			160	7.5kW	1	MDM0311	MDM0339	MDM0360
			150	7.5kW	1	MDM0312	MDM0340	MDM0361
			140	7.5kW	1	MDM0313	MDM0341	MDM0362
			130	7.5kW	1	MDM0314	MDM0342	MDM0363
			120	7.5kW	1	MDM0315	MDM0343	MDM0364
			110	7.5kW	1	MDM0316	MDM0344	MDM0365
			170	1.5/2.2kW-4P	1	MDM0371	MDM0676	MDM0678
			170	4.0kW-4P	1	MDM0372	MDM0677	MDM0680

■ MDM40-2

MODEL	No.	PARTS NAME	IMPELLER O.D.	MOTOR OUTPUT	Q'ty	PARTS CODE	
						EKK	ECF
MDM40-2	230	Impeller	210		1	MDM1309	
			205		1	MDM1302	
			200		1	MDM1303	
			190		1	MDM1304	
			180		1	MDM1305	
			170		1	MDM1306	
			160		1	MDM1307	
			150		1	MDM1308	
			210	4P	1	MDM1309	
	230+ 314.2	Impeller assembly	210		1	MDM1270	MDM1294
			205		1	MDM1271	MDM1295
			200		1	MDM1272	MDM1296
			190		1	MDM1273	MDM1297
			180		1	MDM1274	MDM1298
			170		1	MDM1275	MDM1299
			160		1	MDM1276	MDM1300
			150		1	MDM1277	MDM1301
			210	4P	1	MDM1270	MDM1294
	230+ 310+ 314.2+ 314.4+ 859+ 942	Impeller-Magnet capsule assembly	210	5.5/7.5/11kW	1	MDM1262	MDM1286
			205	5.5/7.5/11kW	1	MDM1263	MDM1287
			200	5.5/7.5/11kW	1	MDM1264	MDM1288
			190	5.5/7.5/11kW	1	MDM1265	MDM1289
			180	5.5/7.5/11kW	1	MDM1266	MDM1290
			170	5.5/7.5/11kW	1	MDM1267	MDM1291
			160	5.5/7.5/11kW	1	MDM1268	MDM1292
			150	5.5/7.5/11kW	1	MDM1269	MDM1293
			210	15/18.5/22/30kW	1	MDM1254	MDM1278
			205	15/18.5/22/30kW	1	MDM1255	MDM1279
			200	15/18.5/22/30kW	1	MDM1256	MDM1280
			190	15/18.5/22/30kW	1	MDM1257	MDM1281
			180	15/18.5/22/30kW	1	MDM1258	MDM1282
			170	15/18.5/22/30kW	1	MDM1259	MDM1283
			160	15/18.5/22/30kW	1	MDM1260	MDM1284
			150	15/18.5/22/30kW	1	MDM1261	MDM1285
			210	5.5kW-4P	1	MDM1262	MDM1286
			210	7.5/11/15kW-4P	1	MDM1254	MDM1278

■ MDM50-1

MODEL	No.	PARTS NAME	IMPELLER O.D.	MOTOR OUTPUT	Q'ty	PARTS CODE		
						PKK/NKK	EKK	ECF
MDM50-1	230	Impeller	165		1	MDM0289	MDM0317	
			160		1	MDM0290	MDM0318	
			150		1	MDM0291	MDM0319	
			140		1	MDM0292	MDM0320	
			130		1	MDM0293	MDM0321	
			120		1	MDM0294	MDM0322	
			110		1	MDM0295	MDM0323	
			170	4P	1	MDM0683	MDM0689	
	230+ 314.2	Impeller assembly	165		1	MDM0380	MDM0408	MDM0436
			160		1	MDM0381	MDM0409	MDM0437
			150		1	MDM0382	MDM0410	MDM0438
			140		1	MDM0383	MDM0411	MDM0439
			130		1	MDM0384	MDM0412	MDM0440
			120		1	MDM0385	MDM0413	MDM0441
			110		1	MDM0386	MDM0414	MDM0442
			170	4P	1	MDM0684	MDM0690	MDM0695
	230+ 310+ 314.2+ 314.4+ 859+ 942	Impeller-Magnet capsule assembly	165	5.5/7.5kW	1	MDM0394	MDM0422	MDM0450
			160	5.5/7.5kW	1	MDM0395	MDM0423	MDM0451
			150	5.5/7.5kW	1	MDM0396	MDM0424	MDM0452
			140	5.5/7.5kW	1	MDM0397	MDM0425	MDM0453
			130	5.5/7.5kW	1	MDM0398	MDM0426	MDM0454
			120	5.5/7.5kW	1	MDM0399	MDM0427	MDM0455
			110	5.5/7.5kW	1	MDM0400	MDM0428	MDM0456
			165	11/15kW	1	MDM0401	MDM0429	MDM0457
			160	11/15kW	1	MDM0402	MDM0430	MDM0458
			150	11/15kW	1	MDM0403	MDM0431	MDM0459
			140	11/15kW	1	MDM0404	MDM0432	MDM0460
			130	11/15kW	1	MDM0405	MDM0433	MDM0461
			120	11/15kW	1	MDM0406	MDM0434	MDM0462
			110	11/15kW	1	MDM0407	MDM0435	MDM0463
			170	1.5/2.2kW-4P	1	MDM0685	MDM0691	MDM0694
			170	4.0kW-4P	1	MDM0686	MDM0692	MDM0696
			170	5.5kW-4P	1	MDM0687	MDM0693	MDM0697

■ MDM50-2

MODEL	No.	PARTS NAME	IMPELLER O.D.	MOTOR OUTPUT	Q'ty	PARTS CODE	
						EKK	ECF
MDM50-2	230	Impeller	210		1	MDM1253	
			205		1	MDM1244	
			200		1	MDM1245	
			190		1	MDM1246	
			180		1	MDM1247	
			170		1	MDM1248	
			160		1	MDM1249	
			150		1	MDM1250	
			210	4P	1	MDM1253	
	230+ 314.2	Impeller assembly	210		1	MDM1212	MDM1236
			205		1	MDM1213	MDM1237
			200		1	MDM1214	MDM1238
			190		1	MDM1215	MDM1239
			180		1	MDM1216	MDM1240
			170		1	MDM1217	MDM1241
			160		1	MDM1218	MDM1242
			150		1	MDM1219	MDM1243
			210	4P	1	MDM1212	MDM1236
	230+ 310+ 314.2+ 314.4+ 859+ 942	Impeller-Magnet capsule assembly	210	5.5/7.5/11kW	1	MDM1204	MDM1228
			205	5.5/7.5/11kW	1	MDM1205	MDM1229
			200	5.5/7.5/11kW	1	MDM1206	MDM1230
			190	5.5/7.5/11kW	1	MDM1207	MDM1231
			180	5.5/7.5/11kW	1	MDM1208	MDM1232
			170	5.5/7.5/11kW	1	MDM1209	MDM1233
			160	5.5/7.5/11kW	1	MDM1210	MDM1234
			150	5.5/7.5/11kW	1	MDM1211	MDM1235
			210	15/18.5/22/30kW	1	MDM1196	MDM1220
			205	15/18.5/22/30kW	1	MDM1197	MDM1221
			200	15/18.5/22/30kW	1	MDM1198	MDM1222
			190	15/18.5/22/30kW	1	MDM1199	MDM1223
			180	15/18.5/22/30kW	1	MDM1200	MDM1224
			170	15/18.5/22/30kW	1	MDM1201	MDM1225
			160	15/18.5/22/30kW	1	MDM1202	MDM1226
			150	15/18.5/22/30kW	1	MDM1203	MDM1227
			210	5.5kW-4P	1	MDM1204	MDM1228
			210	7.5/11/15kW-4P	1	MDM1196	MDM1220

Disassembly/Assembly

Points to be observed

- Follow instructions in this manual for replacement of wear parts. Do not disassemble the pump beyond the extent of the instructions.
- Always wear protective clothing such as an eye protection, chemical resistant gloves, a mask and a face shield during disassembly, assembly or maintenance work. The specific solution will dictate the degree of protection. Refer to SDS precautions from the solution supplier.
- Risk of electrical shock. Be sure to turn off power to stop the pump and related devices before service is performed.
- Magnetic force of the pump is powerful. When taking apart or putting together the pump, take measures not to catch the finger in the metal parts.
- The magnet drive pump has a pair of strong magnets (the magnet capsule unit and drive magnet). The strong magnet field could adversely affect the persons who are assisted by electronic devices such as the pacemaker.

Before disassembly

1 Turn off the power and stop the pump.

2 Close the suction line and the discharge line.

3 Tag motor wires with U(R), V(S), and W(T) codes.
Make sure the motor turns in the correct direction after maintenance is finished.

■ Necessary tools

No.	Tools	MDM25-1	MDM25-2/25-3/32-1 /32-2/40-1/50-1	MDM40-2/50-2	Q'ty
1	Spanner	13mm/17mm/24mm	13mm/19mm/24mm		1 each
2	Hex wrench	4mm/5mm	4mm/5mm		1 each
3	Bearing press (plastic round bar)	ø24×80L	ø34×100L	ø37×100L	1 each
4	Plastic welder or industrial dryer	–			1
5	Handpress	–			1
6	A flathead screwdriver	–			1
7	Longnose pliers	–			1
8	Plastic hammer	–			1
9	Bar	–			2
10	Belt wrench	–			1
11	Metal file	–			1

Pump disassembly

1 For the pump with the drain port, remove the hex head bolts (901.1) and the drain plate (122.1) to drain liquid out of the pump. Flush out remains with clean water. For the pump without the drain port, chemically neutralize the liquid in the pump and plumbing, and open a drain valve in the suction line to empty the pump. Flush out remains with clean water.

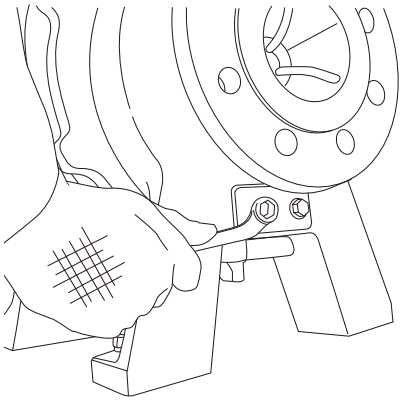

NOTE

- Solution in the discharge line may be under pressure. Release the pressure from the pump and discharge line before disconnecting plumbing or disassembly of the pump to avoid solution spray.
- Try to slowly loosen the hex head bolts just in case the pressure remains in the pump.

2 Remove the mounting bolts (901.7) of the foot support (330).

3 Remove the foot support-pump head mounting bolts (901.5).

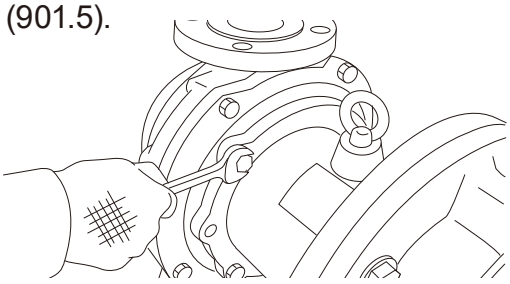

4 Use the attached back pull-out bolts to separate the motor from the pump.

- Thread two bolts through the foot support, one on each side of casing. Alternate from side to side to jack the front casing off the foot support evenly to the distance of:

MDM25-1	40mm (1.57")
MDM25-2/25-3/32-1 /32-2/40-1/40-2/50-1/50-2	80mm (3.14")

- For the MDM40-2/50-2, use the attached guide bolts along with the back pull-out bolts.

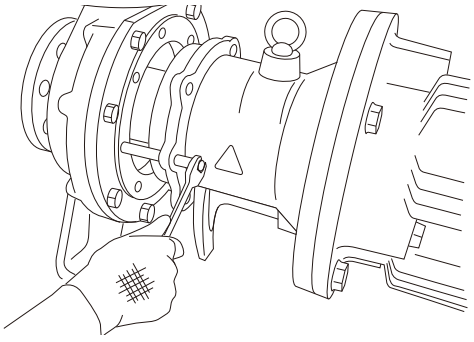

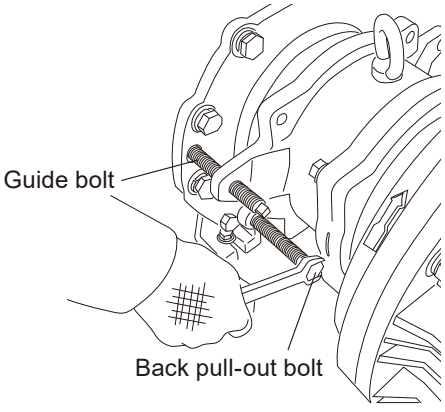

5 Use an overhead crane or any other proper transporting machine to catch/hold the motor (and the foot support) horizontally and pull it back.

- While the motor is lifted up, make sure the drive magnet (858) does not hit the rear casing (158).
- Always keep the motor level.

6 Remove the hex head bolts (901.4) and remove the rear casing supports (161).

If the rear casing support sticks to the cover (100.2), leverage a bar. Be careful not to bite the plastic parts and gaskets with the bar.

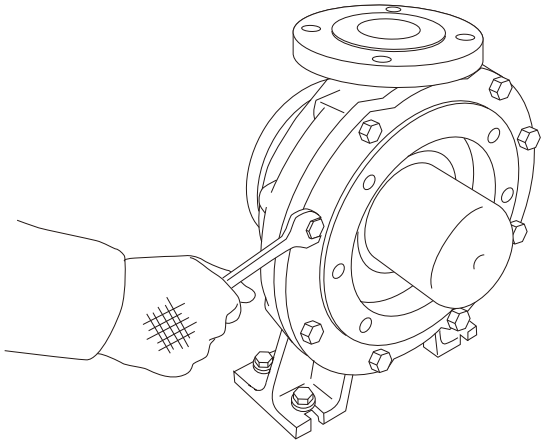

7 Pull out the rear casing cover (159) from the rear casing (158).

If the rear casing cover is difficult to remove, rotate slightly as you pull it from the front casing. If necessary, use a belt wrench and softly turn the rear casing cover.

*Do not damage the plastic rear casing.

*The impeller (230) and the magnet capsule unit (859) come out together with the rear casing. Do not drop.

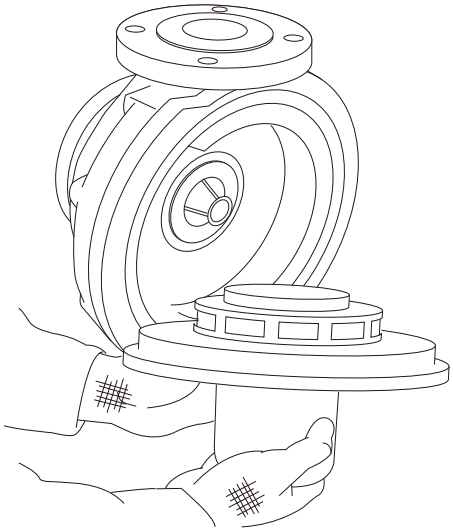

Impeller/Bearing removal

1 Stand up two weld tabs on the rear ring (314.4) using a plastic welder or an industrial dryer.

For the MDM40-2/50-2, the tabs are on the bearing (310).

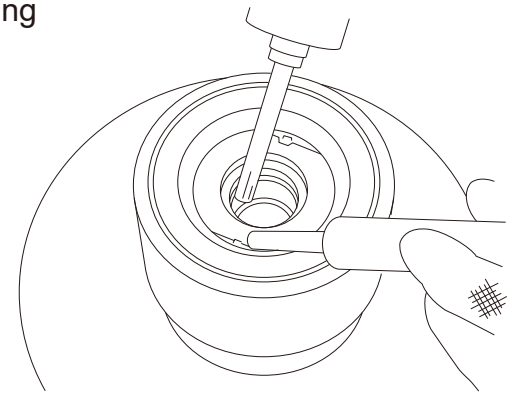

2 Use a hand press and plastic round bar to push the bearing (310) out of the magnet capsule unit.

Use the three different bars depending on the pump model.

Models	O.D.	Length
MDM25-1	24mm (0.94")	80mm (3.14")
MDM25-2/25-3/32-1 /32-2/40-1/50-1	34mm (1.33")	100mm (3.93")
MDM40-2/50-2	37mm (1.45")	

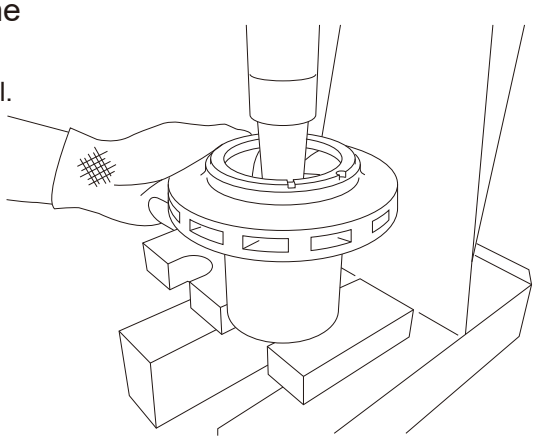

3 Push off the impeller pins (942).

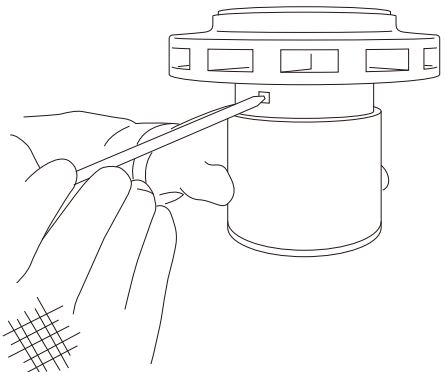

4 Detach the impeller from the magnet capsule unit.

Use a plastic hummer if necessary.

For the MDM25-3/32-2 with the "PKK" wet ends and the "H" liquid temperature type, the impeller and the magnet capsule are not detachable. They are welded together.

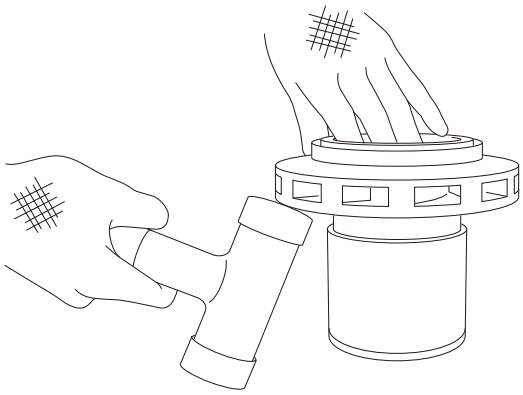

Mouth ring replacement

1 Heat the tabs on the mouth ring (314.2) with a plastic welder or an industrial dryer and open them up.

Remove the worn mouth ring. If necessary, immerse the impeller into a hot water (90°C/194°F) for easier removal.

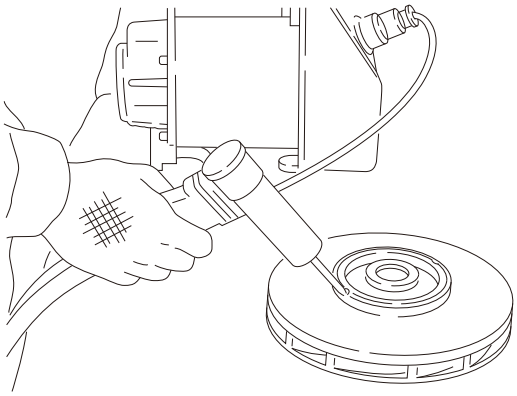

2 Replace the new mouth ring and use a plastic welder or an industrial dryer to hold it with tabs.

If necessary, immerse the impeller into a hot water (90°C/194°F) for easier mounting.

Spindle replacement

1 Simply remove the spindle (210) from the rear casing.

- The spindle is slightly pressed into the rear casing.
- Holding the worn spindle in one hand and rear casing in the other, rock the spindle slightly as you pull them apart.

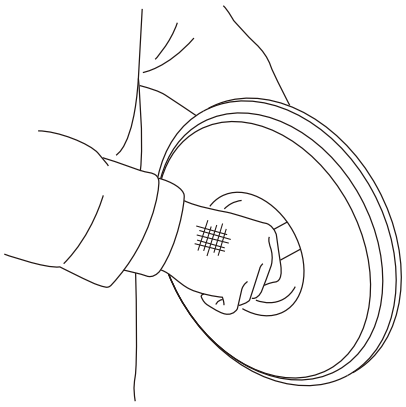

2 Align and insert the rear thrust ring (314.3) and spindle into the rear casing by hand.

- Clean any foreign matter or build-up on the rear casing.
- Make sure that rear thrust ring grooves are facing forwards (to the impeller side).
- Use a hand press if the spindle is difficult to insert into the rear casing.

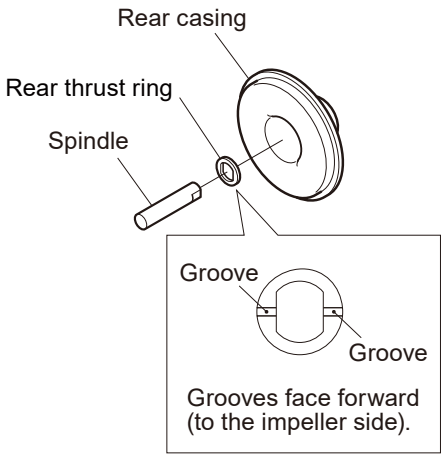

Front casing/Cover unit replacement

See the wear parts replacement section on page 38 and the next page for the models that can replace the cover unit (100.2) and the front casing (100.1).

1 Remove the drain plate (122.1) and air vent plate (122.2) from the cover unit (100.2).

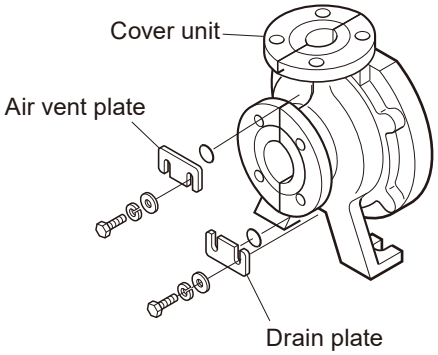

2 Remove all the hex. socket head bolts (903.1).

The cover unit is fixed at the fixing points as shown in the right figure (The fixing points changes depending on the pump model.).

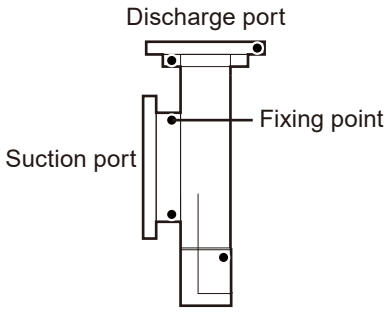

Cover unit (side-view)

3 Detach the cover halves from the front casing.

4 Align and install the new front casing into the covers.

- Clean any foreign matter or build-up on the contacting surfaces of the covers before putting them together.
- Should the front casing be hard to be mounted in the covers, heat the front casing in warm water to 90°C (194°F) to help this step.

NOTE

Be careful not to get scalded with hot water.

- If the new cover unit is used:

The cover halves have sharp edges on their contacting surfaces. Remove them with a metal file so that the front casing will not be damaged.

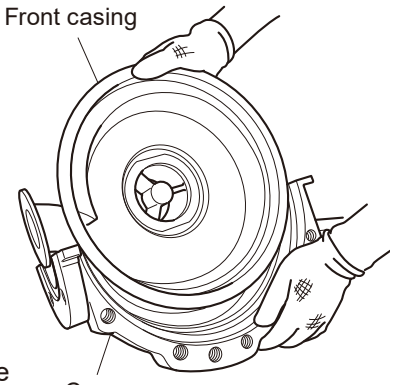

NOTE

This pump uses a pair of strong magnets (the drive/driven magnets). Confirm that there are no metal pieces or other matter adhering to these magnets. If necessary, use an air blow gun and a dry cloth to remove them.

5 Secure all hex. socket head bolts tightly to fix the covers.

6 Tighten the drain and air vent cover hex. bolts.

Impeller/Bearing mounting

1 Align and attach the impeller onto the magnet capsule unit.

- Ensure that the impeller has bottomed within the magnet capsule unit and the impeller securing ports are aligned.
- If the impeller does not go in easily, warm the magnet capsule unit in hot water about 90°C/194°F. For the MDM40-2/50-2, immerse the "impeller" in a hot water.

2 Insert impeller pins.

- Use needle nose pliers to correctly position pins in impeller and magnet capsule unit.
- If the impeller pins do not go in easily, warm the impeller and magnet capsule unit in hot water about 90°C/194°F before putting in the pins.

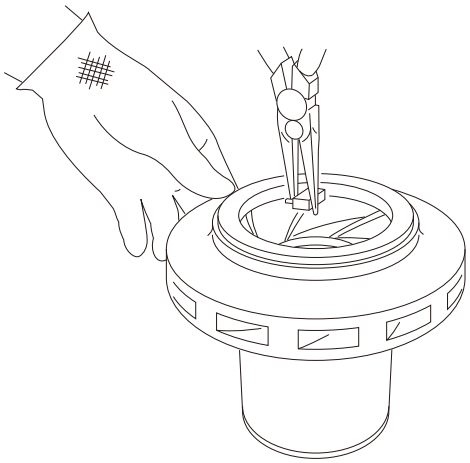

3 Use a hand press and a plastic round bar to press the bearing (310) into the magnet capsule unit.

Use the three different bars depending on the pump model.

Models	O.D.	Length
MDM25-1	24mm (0.94")	80mm (3.14")
MDM25-2/25-3/32-1 /32-2/40-1/50-1	34mm (1.33")	100mm (3.93")
MDM40-2/50-2	37mm (1.45")	100mm (3.93")

*Do not use excessive force that may break the plastic/ceramic mouth ring.

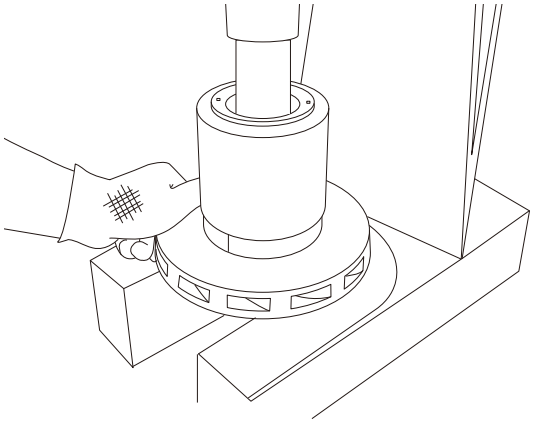

4 Use a hand press to press the new rear ring (314.4) into the magnet capsule unit.

*Note the MDM40-2/50-2 do not have the rear ring.

5 Use a plastic welder or an industrial dryer to hold the rear ring with tabs.

*Note the MDM40-2/50-2 do not have the rear ring.

Pump reassembly

Take the following steps and put together the disassembled pump.

NOTE

- Do not reuse gaskets. Always replace them with new ones, or sealing performance reduces. Clean sealing areas and fit gaskets in place.
- A good seal from the new gasket (400.1) is established in between the front casing (100.1) and the rear casing (158) when the hex head bolts (901.4) are tightened at the rated torque; however, the gasket and the plastic casings start creeping if they are pressed over time. To keep the good seal, wait 4 hours after the hex head bolts (901.4) are tightened first so the plastic parts will creep enough, and then tighten the hex head bolts by the rated torque again.
- Tighten bolts diagonally and evenly by the rated torque before initial operation and at regular intervals.
- The magnetic force of the pump is powerful. Take care not to catch the finger in the foot support. Do not allow iron pieces/powder to adhere to the magnet capsule unit.

1 For the pump with the drain port, attach the drain gasket (400.2) and the drain plate (122.1) to the front casing unit (or the cover unit), and then fasten the hex head bolts (901.1).

Tighten the bolts diagonally and evenly by 8N•m.

2 Fit the new gasket onto the front casing (100.1).

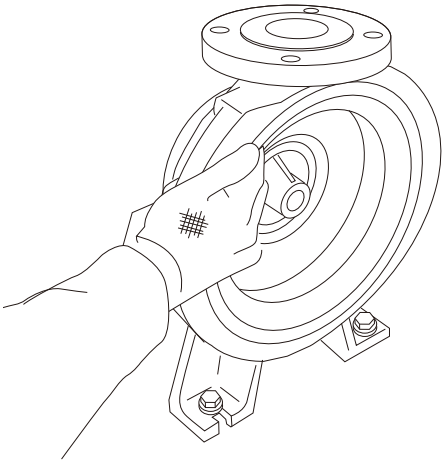

3 Place the magnet capsule unit (plus the impeller) onto the spindle in the rear casing.

Slowly rotate and fit the rear casing to the front casing.

4 Mount the rear casing cover on the rear casing and place the rear casing support.

Secure rear casing support by tightening hex bolts (901.4) diagonally and evenly by the rated torque of:

Models	Tightening torque
MDM25-1	58.8N•m
MDM25-2/25-3/32-1/32-2/40-1/50-1	85N•m
MDM40-2/50-2	120N•m

5 Clean the drive magnet (858) if iron objects stick to the surface.

6 Use the attached back pull-out bolts threaded about half-way through the foot support (330) to ease two assemblies together.

7 Use an overhead crane or any other proper transporting machine to catch/hold the motor (and the foot support) horizontally and shift it to the pump.

- Insert the drive magnet (858) into the foot support (330) taking care to align it such that drive magnet does not contact the rear casing.
- Always keep the motor level.

8 Once the back pull-out bolts come in contact with the rear casing support of the pump, start loosening the bolts gradually and alternately until the motor "lands" on the pump.

For the MDM40-2/50-2, use of guide bolts will make this step easier and more secure.

MDM25-1/25-2/25-3/32-1/32-2/40-1/50-1

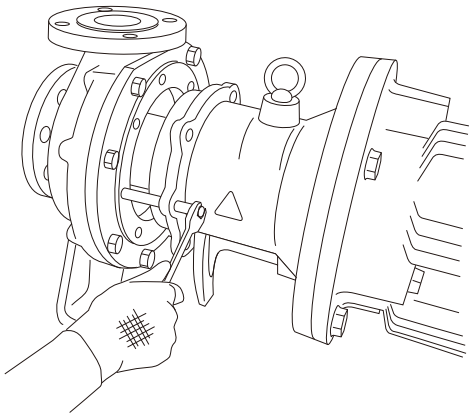

MDM40-2/50-2

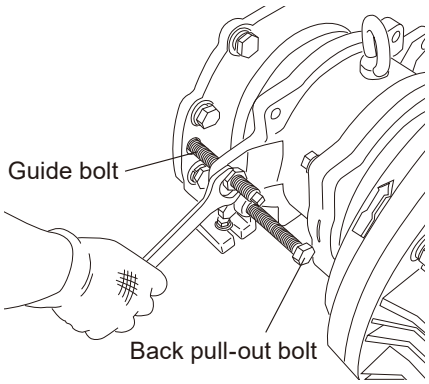

9 Tighten the foot support-rear casing fixing bolts.

NOTE

Magnetic force of the pump is powerful. When taking apart or putting together the pump, take measures not to catch the finger in the metal parts.

Drive magnet demounting

Make sure the motor is electrically-disconnected in advance.

NOTE

If the motor were to run in this process, personal injury would result.

1 Remove the motor (and foot support) from the pump head.

See the Pump disassembly section on page 62.

2 Remove the hexagon head bolt (901.6) and the foot support from the motor.

For the MDM40-2/50-2, the drive magnet can be demounted without taking this step.

3 Loosen the hexagon head set screws (908.1) and demount the drive magnet (858) from the motor shaft.

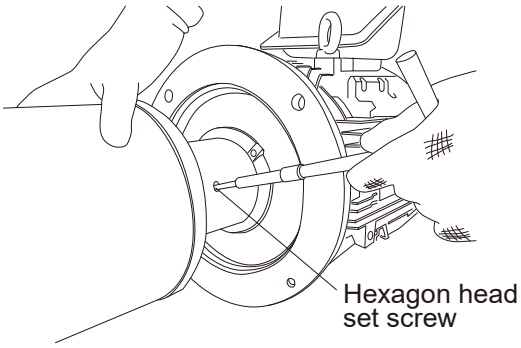

If necessary, leverage a claw bar as shown below. Do not use excessive force that may damage the motor shaft.

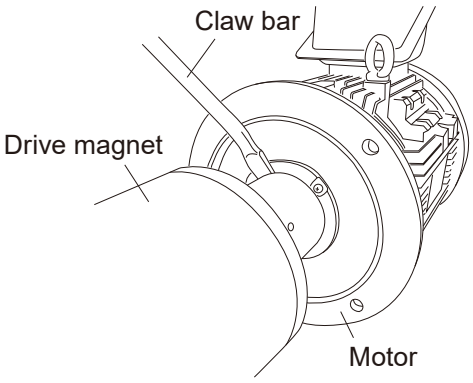

NOTE

For the MDM40-2/50-2, use the attached M16×150mm hexagon bolt to jack the drive magnet unit.

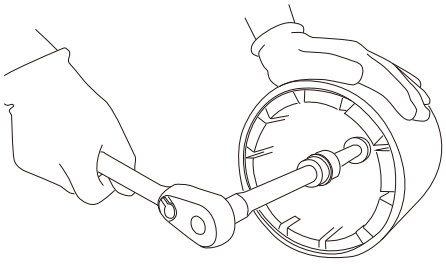

Drive magnet mounting

Make sure the motor is electrically-disconnected in advance.

NOTE

If the motor were to run in this process, personal injury would result.

1 Clean the motor shaft surface and the shaft hole of the drive magnet.

Use a sand paper or sand blaster to remove burrs if necessary.

*Be careful not to drop the drive magnet, or it may break.

2 Adjust the depth of the hexagon socket set screws (908.1) in the drive magnet so they won't hinder the insertion of the drive magnet to the motor shaft.

3 Mount the key to the motor shaft in place beforehand.

4 Slide the drive magnet down to the motor shaft until it bottoms out.

Remove burrs or debris or any other obstacles if any. Adjust the key position if necessary.

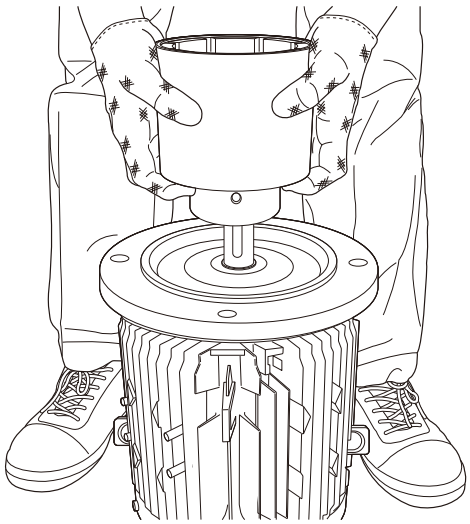

5 Adjust the depth of the drive magnet so the dimension “H” will come to the proper length at each motor size.

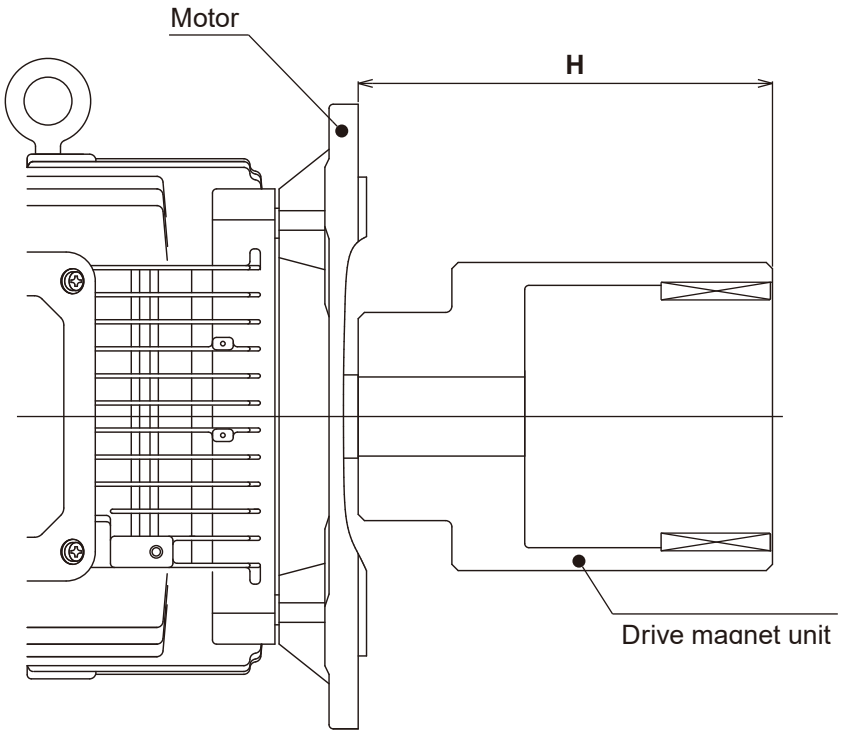

Model	Motor output [kW]	Poles	H [mm]
MDM	1.5	2	120
	2.2		125
	4.0		173
	5.5		199 (262)
	7.5		199 (262)
	11		230 (237)
	15		230 (237)
	18.5		230 (237)
	22		267
	30		267
	0.37	4	130
	0.75		120
	1.5		183
	2.2		179
	4.0		179
	5.5		200 (262)
	7.5		262
	11		237
	15		237

*The parenthetic values are for the MDM40-2 and the MDM50-2.

6 Tighten the hex. socket set screws by the rated torque shown below to fix the drive magnet to the motor shaft.

When a 5.5kW or larger motor is used, apply the LOCTITE #243 onto the screw threads.

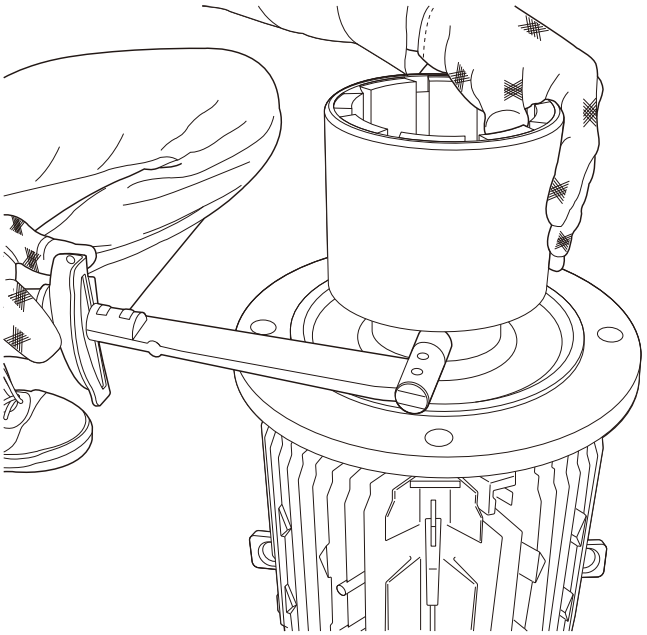

Motor output	Tightening torque	Adhesive application	Adhesive agent
4.0kW or below	15N•m (or 20N•m)	NR	–
5.5kW or above		Required	LOCTITE #243

*The parenthetic torque is for the MDM40-2 and the MDM50-2.

7 Check the drive magnet is fixed tight and won't loose in operation.

8 Remount the foot support to the motor.

NOTE

Always fit the "single" foot support part to the motor first, and then the pump head (driven magnet) to the foot support, on the step by step basis!

Do not fit the combination of the foot support and the pump head (driven magnet) to the motor. There is a very strong magnetic force between the drive magnet and the driven magnet, and there is always the risk of personal injury which could happen when they strongly pull each other.

To take apart the foot support and the pump head in a correct way, see page 62.

Specifications/Outer dimensions

Specifications

Information in this section is subject to change without notice.

■ Pump

50Hz

		MDM25-1	MDM25-2	MDM25-3	MDM32-1	MDM32-2	MDM40-1	MDM40-2	MDM50-1	MDM50-2
Inlet I.D. (mm)		40			50		65		80	
Outlet I.D. (mm)		25			32		40		50	
Top lift (m)	**2P**	36.0	51.6	74.6	36.2	70.4	36.0	62.0	42.9	63.6
	4P	9.8	12.8	17.7	10.0	16.1	8.6	15.5	11.1	16.0
Max flow (L/min)	**2P**	200	200	300	500	600	1000	1400	1400	1800
	4P	200	200	250	350	400	450	900	700	1200
Min flow (L/min)	**2P**	20			50					
	4P	10			20					
Motor output (kW)	**2P**	1.5/2.2	4.0/5.5/7.5	5.5/7.5/11 /15	4.0/5.5/7.5	5.5/7.5/11 /15	4.0/5.5/7.5	5.5/7.5/11 /15/18.5 /22/30	5.5/7.5/11 /15	5.5/7.5/11 /15/18.5 /22/30
	4P	0.37/0.75	1.5/2.2/4.0	1.5/2.2/4.0 /5.5	1.5/2.2/4.0	1.5/2.2/4.0 /5.5	1.5/2.2/4.0	5.5/7.5/11 /15	1.5/2.2/4.0 /5.5	5.5/7.5/11 /15
Noise level (dB)		85		95	85	95	85	95		
Liquid temp (°C)		See page 12.								
Max pressure (MPa)		1.0		1.6	1.0	1.6	1.0	1.6	1.0	1.6
Max viscosity (mPa·s)		Contact us.								
Slurry capability		Pumps with SiC bearing and SiC spindle can handle the slurry with limitations of: - Max concentration of 5% - Max particle size of 50μm - Max hardness of 80Hs Contact us for more information.								
Ambient		0-40°C (32-104°F), 35-85%RH								
Wet ends	**Front casing (100.1)**	PFA/CFRETFE								
	Impeller (230)	PFA/CFRETFE								
	Rear casing (158)	PFA/CFRETFE								
	Magnet capsule (859)	PFA/CFRETFE								
	Bearing (310)	SiC/High density carbon								
	Spindle (210)	SiC/ Highly purity alumina ceramics								
	Liner ring (314.1)	SiC/ Highly purity alumina ceramics								
	Mouth ring (314.2)	SiC/Filled PTFE								
	Rear thrust ring (314.3)	PTFE/Filled PTFE								
	Gasket (400.1)	PTFE								

Outer dimensions

■ Pumps with a baseplate

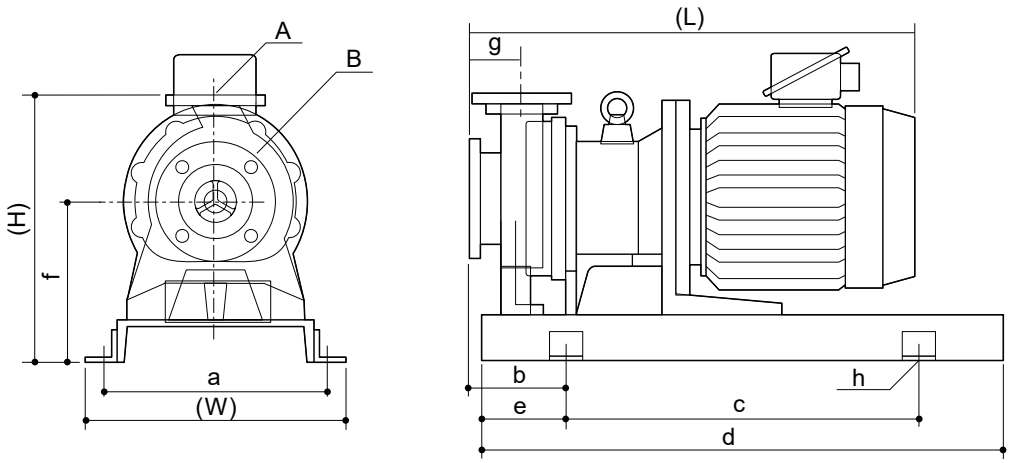

Pump model	Motor output kW	(W)	(H)	(L)	a	b	c	d	e	f	g	h	A	B	Weight w/o motor kg
MDM25-1	1.5	400	400	-	350	135	480	710	115	240	80	4×φ19	25A	40A	63
	2.2														
MDM25-2	4.0	400	430	-	350	150	540	800	130	250	80	4×φ19	25A	40A	89
	5.5														92
	7.5														
MDM25-3	5.5	400	415	-	350	172	540	800	130	250	102	4×φ19	25A	40A	100
	7.5														
	11	480	485		430	192	600	900	150	320					135
	15														
	18.5														
MDM32-1	4.0	400	410	-	350	150	540	800	130	250	80	4×φ19	40A	50A	84
	5.5														87
	7.5														
MDM32-2	5.5	400	430	-	350	150	540	800	130	250	80	4×φ19	40A	50A	105
	7.5														
	11	480	500		430	170	600	900	150	320					140
	15														
	18.5														
MDM40-1	4.0	400	410	-	350	150	540	800	130	250	80	4×φ19	50A	65A	85
	5.5														88
	7.5														
MDM40-2	5.5	490	500	-	440	227.5	740	1120	190	320	100	4×φ23	50A	65A	167
	7.5														
	11														154
	15														156
	18.5														
	22														173
	30														
MDM50-1	5.5	400	430	-	350	170	540	800	130	250	100	4×φ19	65A	80A	96
	7.5														
	11	480	500		430	190	600	900	150	320					129
	15														
	18.5														
MDM50-2	5.5	490	520	-	440	230	740	1120	190	320	100	4×φ23	65A	80A	170
	7.5														
	11														157
	15														159
	18.5														
	22														176
	30														

*The pump unit is shipped without a motor. Contact your motor manufacturer for the info about motor length/weight.
*Outer dimensions are subject to change. Contact us for the up-to-date revision.

■ Pumps without a baseplate

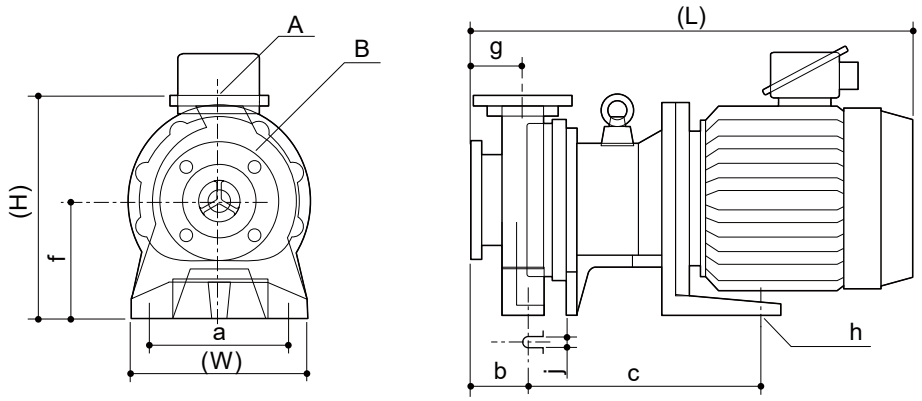

Pump model	Motor output kW	(W)	(H)	(L)	a	b	c	f	g	h	j	A	B	Weight w/o motor kg
MDM25-1	1.5	180	310	-	130	100	150	150	80	2×φ15	15	25A	40A	37
	2.2													
MDM25-2	4.0	280	360	-	220	90	285	180	80	2×φ14	14	25A	40A	62
	5.5						365							65
	7.5													
MDM25-3	5.5	280	345	-	220	112	365	180	102	2×φ14	14	25A	40A	70
	7.5													
	11		395				450	230						85
	15													
	18.5													
MDM32-1	4.0	280	340	-	220	90	285	180	80	2×φ14	14	40A	50A	57
	5.5						365							60
	7.5													
MDM32-2	5.5	280	360	-	220	90	365	180	80	2×φ14	14	40A	50A	75
	7.5													
	11		410				450	230						90
	15													
	18.5													
MDM40-1	4.0	280	340	-	220	90	285	180	80	2×φ14	14	50A	65A	58
	5.5						365							61
	7.5													
MDM40-2	5.5	340	410	-	220	110.5	558.5	230	100	2×φ15	14	50A	65A	109
	7.5													
	11													96
	15													98
	18.5													
	22													115
	30													
MDM50-1	5.5	280	360	-	220	110	365	180	100	2×φ14	14	65A	80A	69
	7.5													
	11		410				450	230						82
	15													
	18.5													
MDM50-2	5.5	340	430	-	220	113	558.5	230	100	2×φ15	14	65A	80A	112
	7.5													
	11													99
	15													101
	18.5													
	22													118
	30													

*The pump unit is shipped without a motor. Contact your motor manufacturer for the info about motor length/weight.
*Outer dimensions are subject to change. Contact us for the up-to-date revision.

EC DECLARATION OF CONFORMITY

A copy of the original Declaration of Conformity

(SUPPLIER'S NAME)

WE

IWAKI CO.,LTD.

(ADDRESS)

6-6 2-CHOME KANDA-SUDACHO CHIYODA-KU TOKYO JAPAN

(PRODUCT)

DECLARE UNDER OUR SOLE RESPONSIBILITY THAT THE PRODUCTS

MAGNETIC DRIVE PUMP

(MODEL NAME)

MDM SERIES

TO WHICH THIS DECLARATION RELATES ARE IN CONFORMITY
WITH THE FOLLOWING STANDARDS OR DIRECTIVES AS FAR AS APPLICABLE

(DIRECTIVES)

MACHINERY DIRECTIVE 2006/42/EC (ANNEX IIA)
RoHS DIRECTIVE 2011/65/EU

(STANDARDS)

EN ISO12100: 2010 EN809: 1998 + A1: 2009 EN IEC63000: 2018

(A PERSON WHO IS AUTHORISED TO COMPILE THE TECHNICAL FILE
IN THE COMMUNITY)

IWAKI EUROPE GMBH
SIEMENSRING 115 D-47877 WILLICH GERMANY

NOTE: THIS DECLARATION BECOMES INVALID IF TECHNICAL OR OPERATIONAL MODIFICATIONS ARE INTRODUCED WITHOUT THE MANUFACTURER'S CONSENT.

T. Sawada.

TSUTOMU SAWADA
DEPUTY SENIOR GENERAL MANAGER,
QUALITY ASSURANCE HEAD OFFICE

Tokyo, Sep. 2, 2021

(PLACE AND DATE OF ISSUE) **(NAME AND SIGNATURE OR EQUIVALENT MARKING OF AUTHORIZED PERSON)**

DOCUMENT NO. IS-51K-493-6

UK DECLARATION OF CONFORMITY

A copy of the original Declaration of Conformity

(SUPPLIER'S NAME)

WE

IWAKI CO.,LTD.

(ADDRESS)

6-6 2-CHOME KANDA-SUDACHO CHIYODA-KU TOKYO JAPAN

(PRODUCT)

DECLARE UNDER OUR SOLE RESPONSIBILITY THAT THE PRODUCTS

MAGNETIC DRIVE PUMP

(MODEL NAME)

MDM SERIES

TO WHICH THIS DECLARATION RELATES ARE IN CONFORMITY WITH THE FOLLOWING REGULATIONS OR STANDARDS AS FAR AS APPLICABLE

(REGULATIONS)

S.I. 2008/1597 SUPPLY OF MACHINERY (SAFETY)
S.I. 2012/3032 RESTRICTION OF HAZARDOUS SUBSTANCES

(STANDARDS)

EN ISO12100: 2010 EN809: 1998 + A1: 2009 EN IEC63000: 2018

(A PERSON WHO IS AUTHORISED TO COMPILE THE TECHNICAL FILE IN THE GB MARKET)

SENSYS LIMITED
UNIT 9 POND CLOSE WALKERN ROAD
STEVENAGE HERTS SG1 3QP UK

NOTE: THIS DECLARATION BECOMES INVALID IF TECHNICAL OR OPERATIONAL MODIFICATIONS ARE INTRODUCED WITHOUT THE MANUFACTURER'S CONSENT.

T. Sawada.

TSUTOMU SAWADA
SENIOR GENERAL MANAGER,
QUALITY ASSURANCE HEAD OFFICE

Tokyo, Jun. 6, 2023

(PLACE AND DATE OF ISSUE) **(NAME AND SIGNATURE OR EQUIVALENT MARKING OF AUTHORIZED PERSON)**

DOCUMENT NO. IS-51K-591-1

CE/UKCA conformity

■ Information on CE/UKCA conformity of pump units when the motor is fitted by the customer (dealer/operator)

We hereby confirm the CE/UKCA conformity of our pump unit provided that the following criteria about intended use are satisfied as described in this instruction manual:

- Motor conformity in accordance with any relevant EC directives/UKCA regulations which are currently effective.
- The dimensions of a required motor flange and shaft must fit the specified pump.
- The motor must be installed to the pump according to this instruction manual.
- Guaranteed grounding
- The pump must not be repainted over our original upper coating.

Any reseller or dealer who connects the pump with a motor and markets it as a complete unit must conform to all relevant EC directives/UKCA regulations. In such cases, the reseller or dealer then becomes the manufacturer.

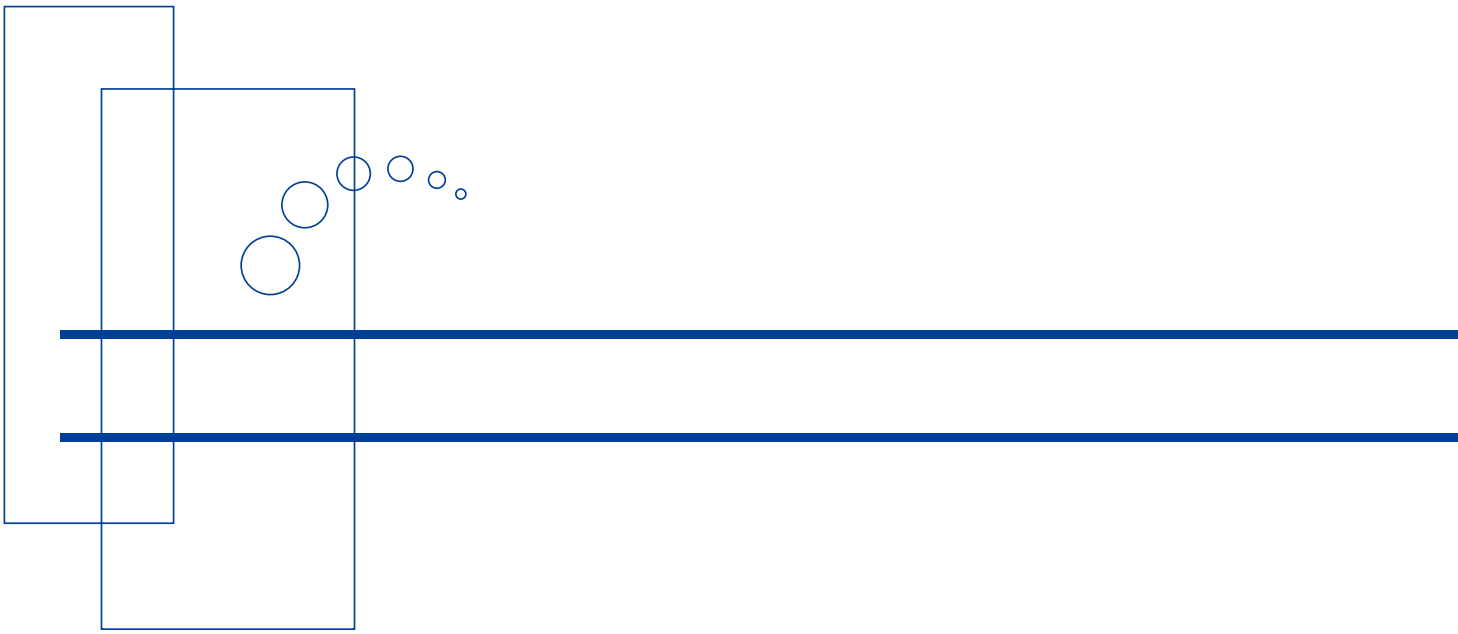

https://www.iwakipumps.jp

IWAKI CO.,LTD. 6-6 Kanda-Sudacho 2-chome Chiyoda-ku Tokyo 101-8558 Japan
TEL: +81 3 3254 2935 FAX: +81 3 3252 8892

European Headquarter / IWAKI Europe GmbH
TEL: +49 2154 9254 0 FAX: +49 2154 9254 48
Germany / IWAKI Europe GmbH
TEL: +49 2154 9254 50 FAX: +49 2154 9254 55
The Netherlands / IWAKI Europe GmbH (Netherlands Branch)
TEL: +31 74 2420011 FAX: +49 2154 9254 48
Italy / IWAKI Europe GmbH (Italy Branch)
TEL: +39 0445 561219 FAX: +39 0445 569088
Spain / IWAKI Europe GmbH (Spain Branch)
TEL/FAX: +34 934 741 638
Poland / IWAKI Europe GmbH (East Europe Branch)
TEL: +48 12 347 0755 FAX: +48 12 347 0900
Denmark / IWAKI Nordic A/S
TEL: +45 48 242345
Finland / IWAKI Suomi Oy
TEL: +358 10 201 0490
Norway / IWAKI Norge AS
TEL: +47 23 38 49 00

Sweden / IWAKI Sverige AB
TEL: +46 8 511 72900
Belgium / IWAKI Belgium N.V.
TEL: +32 13 670200 FAX: +32 13 672030
France / IWAKI France S.A.
TEL: +33 1 69 63 33 70 FAX: +33 1 64 49 92 73
U.S.A. / IWAKI America Inc.
TEL: +1 508 429 1440 FAX: +1 508 429 1386
Brazil / IWAKI Do Brasil Comercio De Bombas Hidraulicas LTDA.
TEL/FAX: +55 19 3244 5900
China (Shanghai) / IWAKI Pumps (Shanghai) Co., Ltd.
TEL: +86 21 6272 7502 FAX: +86 21 6272 6929
China (Hong Kong) / IWAKI Pumps Co., Ltd.
TEL: +852 2607 1168 FAX: +852 2607 1000
China (Guangzhou) / GFTZ IWAKI Engineering & Trading Co., Ltd.
TEL: +86 20 84350603 FAX: +86 20 84359181
China (Shenzhen) / IWAKI Pumps (Shenzhen) Co., Ltd.
TEL: +86 0755 8656 3696

Singapore / IWAKI Singapore Pte Ltd.
TEL: +65 6316 2028 FAX: +65 6316 3221
Indonesia / IWAKI Singapore Pte Ltd. (Indonesia Office)
TEL: +62 21 6906606 FAX: +62 21 6906612
Malaysia / IWAKIm SDN. BHD.
TEL: +60 3 7803 8807 FAX: +60 3 7803 4800
Korea / IWAKI Korea Co., Ltd.
TEL: +82 2 6238 4800 FAX: +82 2 6238 4801
Taiwan / IWAKI Pumps Taiwan Co., Ltd.
TEL: +886 2 8227 6900 FAX: +886 2 8227 6818
Thailand / IWAKI (Thailand) Co., Ltd.
TEL: +66 2 322 2471 FAX: +66 2 322 2477
Australia / IWAKI Pumps Australia Pty Ltd.
TEL: +61 2 9899 2411 FAX: +61 2 9899 2421

T382-31 '26/09