Iwaki Magnetic Drive Pump
MDM (Long coupling type)

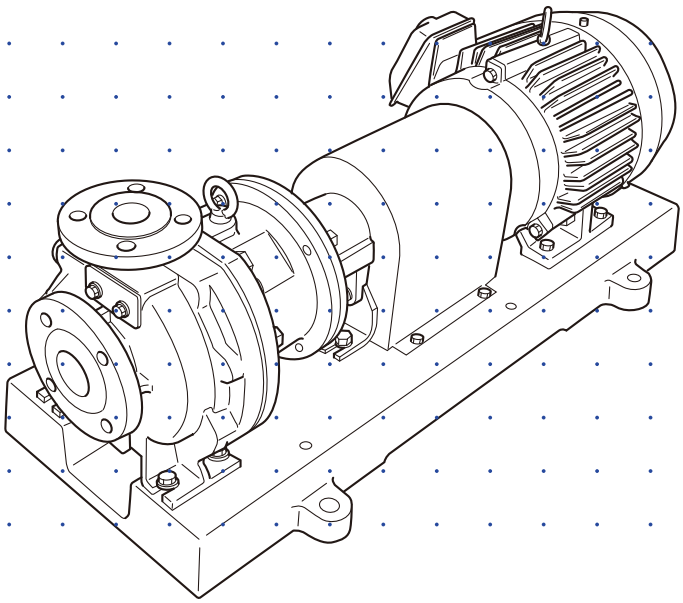

Instruction manual

Thank you for choosing our product.

⚠ Please read through this instruction manual before use.

This instruction manual describes important precautions and instructions for the product. Always keep it on hand for quick reference.

©2024 IWAKI CO., LTD.

Order confirmation

Open the package and check that the product conforms to your order. If any problem or inconsistency is found, immediately contact your distributor.

a. Check if the delivery is correct

Check the nameplate to see if the information such as model codes, discharge capacity and discharge head are as ordered.

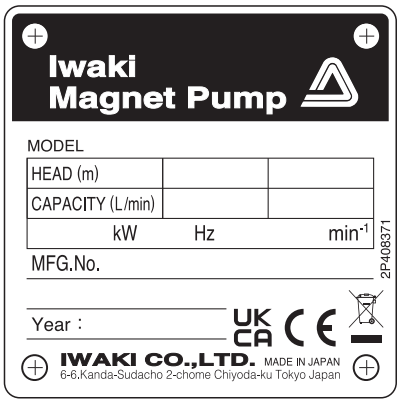

*The CE/UKCA markings on our product(s) are for us to market the product(s) into the European Union market/ the Great Britain (England, Wales and Scotland) market, however, the CE/UKCA markings do not ensure any safety or conformity of the product(s) outside the EU/GB markets.
When the pump is incorporated into the equipment marketed in the EU/GB markets, such equipment must meet all the requirements of applicable directives/regulations. In such a case, any person who places the equipment on the markets must carry CE/UKCA marks on the equipment as a manufacturer.

b. Check accessories are complete

Standard parts:

- Motor back pull-out bolts
  Two (2) M12×90mm hexagon bolts

Optional parts:

- Spare parts if ordered
- The DRN pump protector if ordered

c. Check if the delivery is damaged or deformed

Check for transit damage and loose bolts.

*Tighten the hex head bolts (901.4) that hold the rear casing support (161) by 85 N•m. Before tightening these bolts, be sure to loosen the hex head bolts (901.7/901.9) to unfix the support (183) and motor (800) from the base (890). See page 38 as well.

Contents

Order confirmation **2**

Safety instructions *5*

WARNINGS **6**
CAUTIONS **7**
Precautions for use **9**

Overview *10*

Introduction **10**
Pump structure & Operating principle 10
Conforming standards 10
Part names **11**
Pump 11
Limitations **12**
Pressure 12
Liquid 12
Identification codes **13**
Pump 13

Installation *14*

Pump mounting **14**
Installation location 14
Pump position 14
Foundation work 14
Plumbing **15**
Flange connection 15
Piping load & Moment 15
System overview 16
Suction line 16
Discharge line 18
Wiring **19**
Power voltage 19
Electrical motor 19
Starting methods 20
Use of an inverter (full-voltage starting) 20
Sensors 20

Operation 21

Before operation **22**
- Points to be checked 22
- Priming 22
- Motor rotation check 22
- Degassing 23

Commissioning **24**
- Starting process 24
- Shut-down process 25
- Suspension & Restart 25

Maintenance 26

Troubleshooting **26**

Inspection **34**
- Daily inspection 34
- Periodic inspection 35
- Wear limits of bearing and spindle 36
- Wear limits of mouth ring 36
- Ball bearing life 37

Wear part replacement **37**
- Wear part list 38
- Impeller part list 40
  - Standard temperature type 40
  - "H" liquid temperature type 41
  - "T" liquid temperature type 42

Disassembly/Assembly **43**
- Before disassembly 43
- Separation of the motor from the pump 44
- Pump disassembly 45
- Impeller/Bearing removal 47
- Mouth ring replacement 48
- Spindle replacement 48
- Impeller/Bearing mounting 49
- Bearing housing disassembly 50
- Bearing housing reassembly 52
- Pump reassembly 54

Specifications/Outer dimensions **56**
- Specifications 56
  - Pump 56
- Outer dimensions 57
  - Pumps without a baseplate, coupling and motor 57
- EC DECLARATION OF CONFORMITY 58
- UK DECLARATION OF CONFORMITY 59
- CE/UKCA conformity 60

Safety instructions

Read through this section before use. This section describes important information for you to prevent personal injury or property damage.

■ Symbols

In this instruction manual, the degree of risk caused by incorrect use is noted with the following symbols. Please pay attention to the information associated with the symbols.

⚠ **WARNING**	**Indicates mishandling could lead to a fatal or serious accident.**
⚠ **CAUTION**	**Indicates mishandling could lead to personal injury or property damage.**

A symbol accompanies each precaution, suggesting the use of "Caution", "Prohibited actions" and specific "Requirement".

Caution marks



Prohibition mark



Requirement mark



⚠Export Restrictions

Technical information contained in this instruction manual might be treated as controlled technology in your countries, due to agreements in international regime for export control.
Please be reminded that export license/permission could be required when this manual is provided, due to export control regulations of your country.

⚠WARNINGS


Prohibited

Access limitation

The magnet drive pump has a pair of strong magnets (the magnet capsule unit and drive magnet). The strong magnet field could adversely affect the persons who are assisted by electronic devices such as the pacemaker.


Electrical shock

Turn off power before service

Risk of personal injury. Before performing any service, turn off power to stop the pump and related devices and display a warning sign near the power switch to prevent others from restoring power during service.


Wear protectors

Wear protective clothing

Always wear protective clothing such as an eye protection, chemical resistant gloves, a mask and a face shield during disassembly, assembly or maintenance work. The specific solution will dictate the degree of protection. Refer to SDS precautions from the solution supplier.


Requirement

Use an overhead crane or any other proper transporting machine

Two or more operators may be needed for ensuring safe transport depending on the pump size and weight.


Requirement

Use the eye bolt or lifting holes (if provided)

Use the eye bolt when lifting the pump only. If the pump and the motor are mounted on the baseplate, use lifting holes on the baseplate.


Do not remodel

Do not modify the pump

Alterations to the pump carry a high degree of risk. It is not the manufacturer's responsibility for any failure or injury resulting from alterations to the pump.


Requirement

Daily inspection and maintenance

Daily inspection and maintenance are required for the prevention of chemical spray or leakage when handling:

- Explosive or flammable liquid,
- Corrosive liquid, or
- Harmful liquid.


Requirement

Ventilation

Fumes or vapours can be hazardous with certain solutions. Ensure proper ventilation at the operation site.


Requirement

Do not touch a rotating part

A pump shaft and a motor shaft are coupled outside (coupling type). Be sure to cover the bare coupling in order to reduce the risk of personal injury which may occur as coming in contact with the coupling in operation.

⚠CAUTIONS


Requirement

Qualified personnel only

The pump should be handled or operated by qualified personnel with a full understanding of the pump. Any person not familiar with the product should not take part in the operation or management of the pump. If necessary, provide training to operators.


Requirement

Do not catch the finger

Magnetic force of the pump is powerful. When taking apart or putting together the pump, take measures not to catch the finger in the bracket. Also, keep the drive magnet and the driven magnet free from iron debris/ powder.


Prohibited

Pay attention to magnet force

The pair of strong magnets in the pump and its magnetic force may adversely affect magnetic disks/cards or wrist watches. Do not bring them close to the pump.


Requirement

Use specified power only

Do not apply power other than that specified on the nameplate. Otherwise, failure, fire or electrical shock may result. Ensure the pump is properly grounded.


Prohibited

Do not run pump dry

Do not run pump dry (operation without priming water or with a suction valve closed). Internal parts are excessively worn by friction heat and fatal pump damage results.


Prohibited

Do not install/store the pump:

- In a flammable/explosive/corrosive atmosphere.
- In a dusty/humid environment.
- Where ambient temperature can exceed 0-40ºC.
- Where ambient humidity can exceed 35-85%RH.
- In direct sunlight or wind & rain (except an outdoor type).
- Under mechanical vibrations.


Prohibited

Do not use the pump in any condition other than its intended purpose

The use of the pump in any conditions other than those clearly specified may result in failure or injury. Use this product in specified conditions only.


Requirement

Static electricity

When low electric conductivity liquids such as ultra-pure water and fluor inactive liquid (e.g. Fluorinert™) are handled, static electricity may be generated in the pump and may cause static discharge. Take countermeasures to remove static electricity.


Requirement

Commissioning

Friction heat builds up and damages the internal parts. Break in the pump to expel gas from the pump and piping, especially when handling liquids that generate gas bubbles (hydrogen peroxide or sodium hypochlorite)


Requirement

Spill precautions

Ensure protection and containment of solution in the event of plumbing or pump damage (secondary containment). Do not drain the liquid onto the floor.


Prohibited

Do not stand on the pump

Injury or damage may result when the pump turns over.


Caution

Do not touch the pump or pipe with bare hands

Risk of burns. The surface temperature of the pump or piping becomes very high during and immediately after operation, depending on the liquid temperature.


Grounding

Grounding

Risk of electric shock! Always properly ground the pump. Conform to local electric codes.


Electrical shock

Install a GFCI (earth leakage breaker)

An electrical failure of the pump may adversely affect other devices on the same line. Purchase and install an earth leakage breaker separately.


Requirement

Before starting the pump

Ensure no one is around the pump before connecting the power. The pump does not have an ON-OFF switch and starts automatically when the power cable is plugged in.


Requirement

Disposal of a used pump

Remove the liquid and flush it out before the pump is disconnected from piping. Dispose of any used or damaged pump and the removed liquid in accordance with local rules and regulations. If necessary, consult a licensed industrial waste disposal company.

Precautions for use

- Electrical work should be performed by a qualified electrician. Otherwise, personal injury or property damage may result.



- Tighten the hex head bolts (901.4) that hold the rear casing support (161) by 85 N•m. Before tightening these bolts, be sure to loosen the hex head bolts (901.7/901.9) to unfix the support (183) and motor (800) from the base (890).



- Allow sufficient space around the pump for easy access and maintenance.



- Use care handling the pump. Do not drop. An impact may affect pump performance. Do not use a pump that has been damaged to avoid the risk of electrical damage or shock.



- The pump is not waterproof. Do not operate the pump while wet with solution or water. Failure or injury may result. Immediately dry off the pump if it gets wet.



- Solution may leak. Do not close/block discharge line during operation. Install a relief valve to ensure safety and prevent damaged plumbing.



- Solution in the discharge line may be under pressure. Release the pressure from the discharge line before disconnecting plumbing or disassembly of the pump to avoid solution spray.



- Wear protective clothing when handling or working with pumps. Consult solution SDS for appropriate precautions. Do not come into contact with residual solution.



- Do not clean the pump or nameplate with a solvent such as benzine and thinner. This may discolour the pump or erase printing. Use a dry or a damp cloth or a neutral detergent.



- Empty and clean the pump before it is left stopped for a long time.



- In accordance with the European Directive 2012/19/EU on waste electrical and electronic equipment (WEEE), this product features the crossed-out wheelie bin symbol. When this product is disposed of in household wastes, toxic components included in it can cause major environmental and human health problems. Use appropriate waste collection systems for recovery and recycling. Contact your local distributor or nearest Iwaki company for the detailed collection systems.



Overview

Pump characteristics, features and part names are described in this section.

Introduction

Pump structure & Operating principle

The MDM series is an industrial magnetic drive pump which is designed for handling various chemicals including a strong acid and alkali.

Principle of operation

- The magnetic coupling between the drive magnet and the driven magnet (magnet capsule) transfers the rotation energy of the motor to the impeller in the front casing, where a liquid is transferred from the inlet to outlet.
- When the driven magnet rotates in the front casing, the mouth ring and the liner ring slide over each other as the thrust force pushes the driven magnet forward. Also, the bearing and the spindle slide over each other as the radial force accompanies the rotation of the driven magnet.
- The MDM series with the long coupling has PFA casings (front casing, rear casing, and impeller), SiC sliding parts (mouth ring/liner ring, bearing/spindle) and PTFE gaskets.

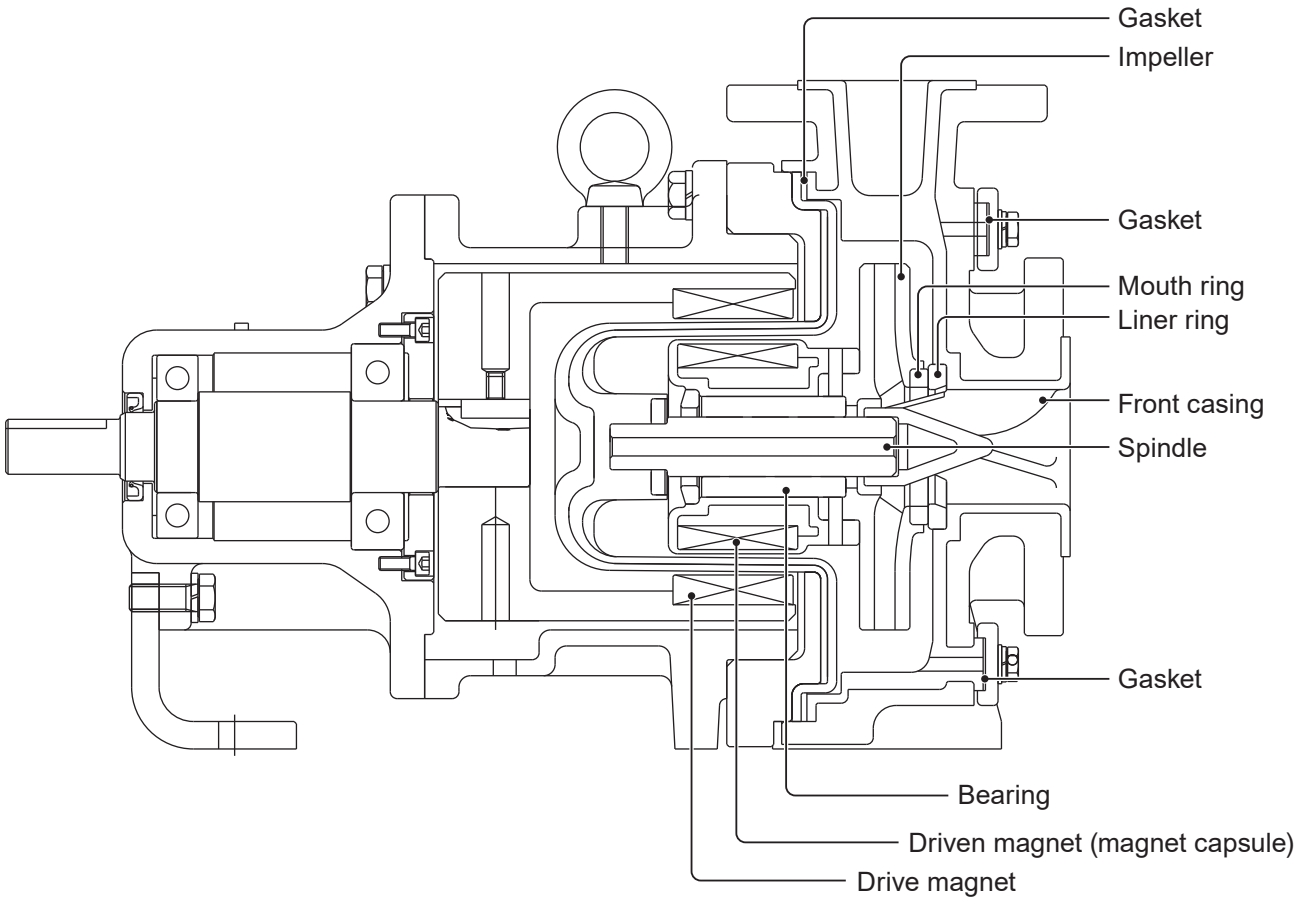

Conforming standards

Mounting dimensions: ISO 2858 (pumps with baseplate)
Flange PCD: JIS 10K/ ISO PN16/ ANSI 150LB

Part names

Pump

The illust below represents the pump on the baseplate.

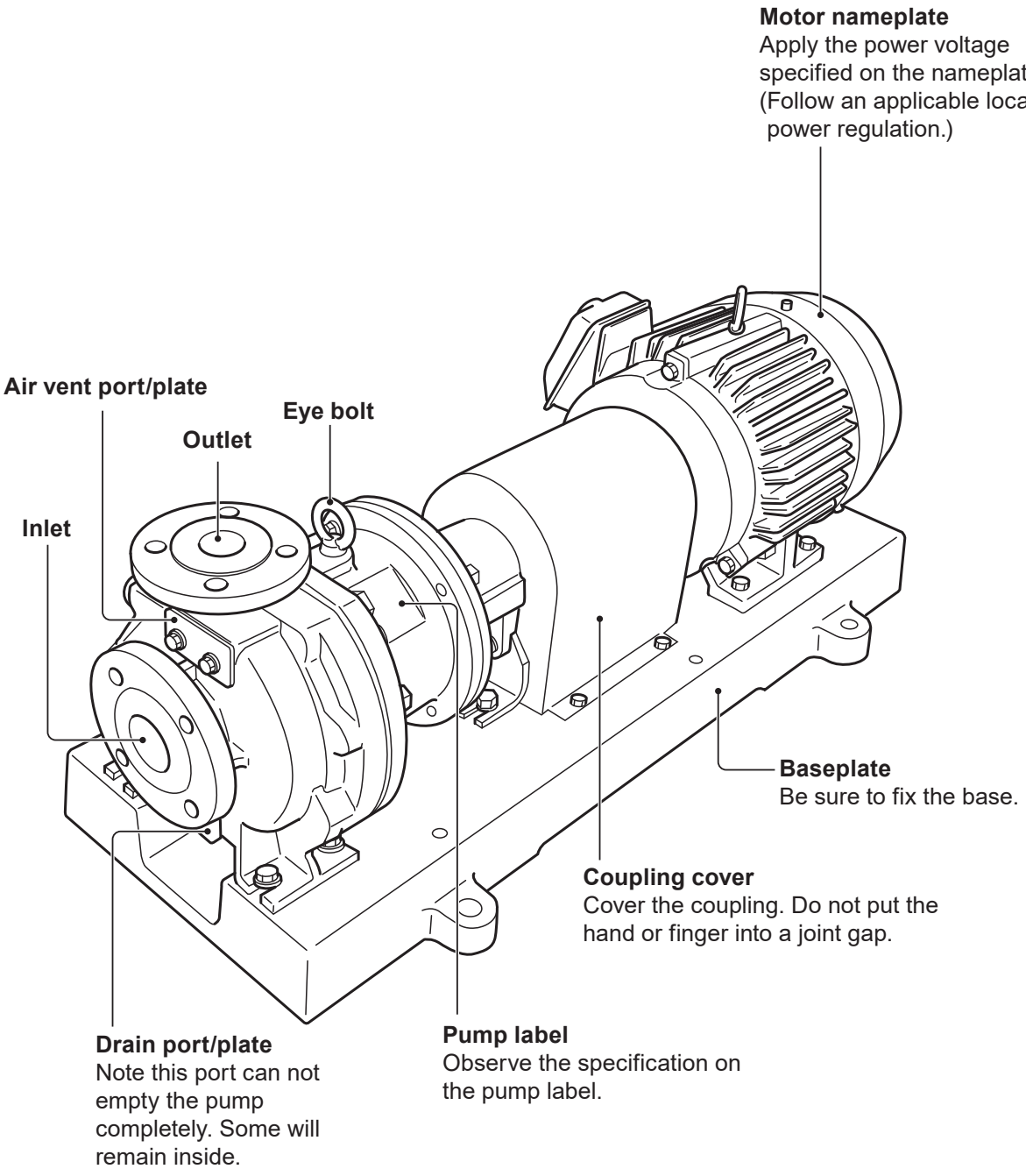

*The air vent port and the drain port are optionally available.

*Do not clean the pump or nameplate with a solvent such as benzine and thinner. This may discolour the pump or erase printing. Use a dry or a damp cloth or a neutral detergent.

Limitations

Pressure

Observe the maximum allowable discharge pressure of 1.6 MPa.

Liquid

- **Slurry**

  The KK type (SiC bearing/SiC spindle) can handle slurry up to 5% (concentration), 50μm (particle size) and 80Hs (hardness). You will need shorter maintenance frequency so the internal parts won't wear badly. Contact us for more information.

- **Performance change**

  Shaft power, discharge capacity, and a delivery head vary with liquid specific gravity and liquid viscosity. The pump is designed for use with limited liquid properties. Contact us if any liquid other than that originally planned is used.

- **Temperature change**

  Note that liquid viscosity, vapour pressure, and chemical aggressiveness change with liquid temperature. Monitor the liquid temperature for ensuring good operating conditions.

Allowable liquid temperature range (tap water):

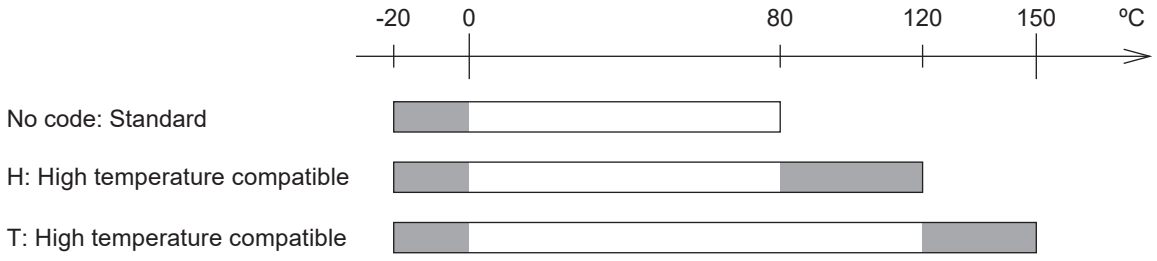

Allowable ambient temperature: 0 - 40°C

Allowable ambient humidity: 35 - 85%RH

*The allowable liquid temperature range changes with liquid properties. Contact us for detail.
*Use in the grey zone could be possible depending on operating conditions. Contact us for detail.

Identification codes

Each code represents the following information.

Pump

MDM 80-50-160 P KK C 075 I - D 2 H
a b c d e f g h i

a. Pump inlet/outlet size and Impeller O.D.

Inlet	Outlet	Impeller O.D. (nominal)
50A	32A	160/200
65A	40A	160
80A	50A	160

*See the nameplate for the actual impeller outer diameter.

b. Casing materials

P: PFA

c. Bearing/Spindle materials

KK: SiC/SiC

d. Motor

C: Foot mounted motor

e. Motor output

022: 2.2 kW 040: 4.0 kW 055: 5.5 kW
075: 7.5 kW 110: 11 kW 150: 15 kW

f. Flange connection/Motor standard

I: ISO flange + IEC motor

g. Drain/Special version

Code	Drain port	Baseplate	Special version
A	No	Yes	Standard
S			Customized
D	Yes*		Standard
X			Customized
B	No	No	Standard
Y			Customized
E	Yes*		Standard
Z			Customized

*A pump that has the drain port will have the air vent port also.

h. Motor pole

2: Two poles 4: Four poles

i. Liquid temperature

No code: Standard
H: High temperature compatible (80 - 120°C)
T: High temperature compatible (120 - 150°C)

Installation

This section describes the installation of the pump, piping and wiring. Read through this section before work.

Points to be observed

- Be sure to turn off power to stop the pump and related devices before service is performed.
- If you notice any abnormal or dangerous conditions, suspend operation immediately and inspect/solve problems.
- Do not place explosive or flammable material near the pump.
- Use of a damaged pump could lead to an electric shock or death.

Pump mounting

Select an installation location and mount the pump.

Installation location

1. Select a flat and firm foundation where is free from mechanical vibration.

2. Allow sufficient space around the pump for easy access and maintenance (motor back pull out).

3. The concrete foundation should be larger than a pump base footprint.

Pump position

Install the pump as close to the supply tank in the flooded suction method which is recommended.
If the suction lift method is used due to the limitation on plumbing latitude, see page 18.

Foundation work

1. See the diagram when mounting the baseplate onto the concrete foundation.

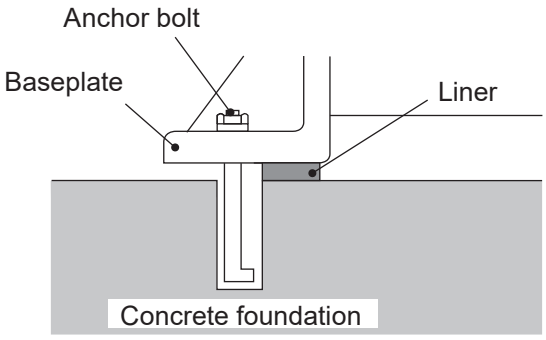

2. If you purchased the pump without the baseplate and mounted the pump directly on the foundation, do not anchor all the "legs". Leave the support (183) NOT anchored, or the motor won't be pulled back.

Plumbing

Plumbing latitude is often affected by facility size and any other conditions like the positional relationship between the tank location and the pump location. This section shows the minimum requirements to ensure your plumbing system works well.

NOTE

- Before plumbing, remove the protective cap from the pump inlet and outlet.
- Do not apply adhesive too much or leave a screw or a nut in the plumbing when it is built up. Also, blow out any small debris from the plumbing so they won't taken into the pump and lead to failure.
- Use measures to keep the pump connections free from stress. Weight and thermal expansion/contraction of the piping can stress connection points.

Flange connection

Integrate the pump into your plumbing. Fasten the flange tightening bolts diagonally and evenly by the following torque. No gap is allowed between flanges. Always use a gasket in between metal flanges.

Bolt size	Tightening torque
M16	78.4 N•m

Piping load & Moment

Do not apply excess load to the pump inlet flange and outlet flange. See below for the max allowable force and moment.

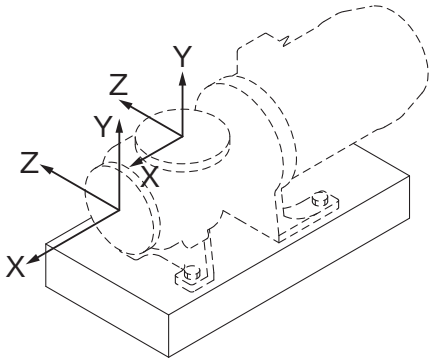

Maximum force to inlet & outlet flanges

Direction of load	Load (kN)			
	Outlet flange		Inlet flange	
	MDM50-32-160/ MDM50-32-200/ MDM65-40-160	MDM80-50-160	MDM50-32-160/ MDM50-32-200/ MDM65-40-160	MDM80-50-160
Fx	0.71	1.07	0.89	1.33
Fy (Pressure/Tension)	0.89/0.44	1.33/0.67	0.58	0.89
Fz	0.58	0.89	0.71	1.07

Maximum moments to inlet & outlet flanges

Direction of load	Moment (kN•m)			
	Outlet flange		Inlet flange	
	MDM50-32-160/ MDM50-32-200/ MDM65-40-160	MDM80-50-160	MDM50-32-160/ MDM50-32-200/ MDM65-40-160	MDM80-50-160
Mx	0.46	0.95	0.46	0.95
My	0.35	0.72	0.35	0.72
Mz	0.23	0.47	0.23	0.47

System overview

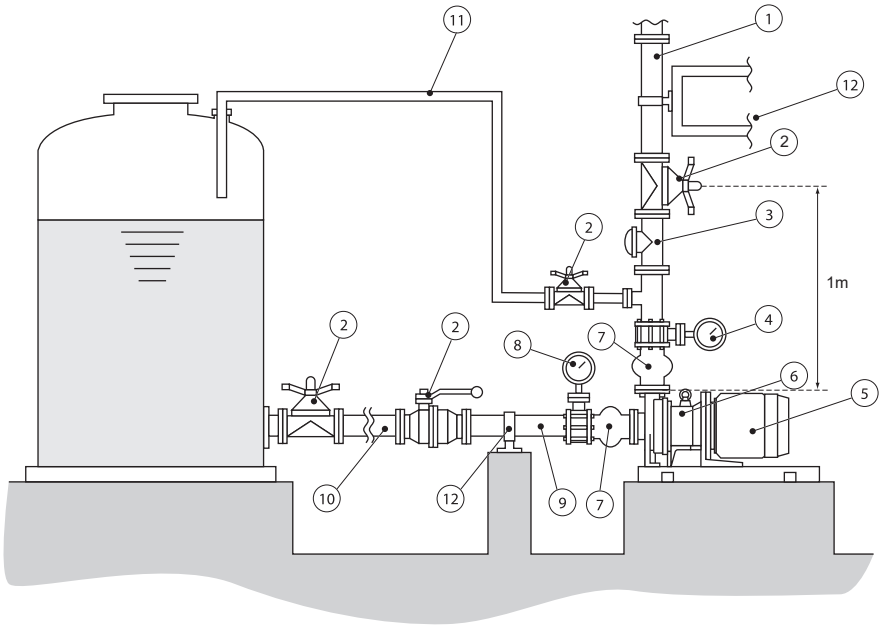

1. Discharge line
2. Gate valve
3. Check valve
4. Pressure gauge
5. Motor
6. Magnetic drive pump
7. Expansion joint
8. Vacuum (compound) gauge
9. Straight suction line
10. Suction line
11. Air vent line
12. Pipe support

Suction line

When the suction line of the system is build up, meet the following requirements:

- *Flooded suction:* Establish a flooded suction system. A suction lift system is much less efficient and so it is not recommended.
- *Line I.D.:* Ensure the suction line I.D. is equal to or larger than the pump inlet and NPSHr is satisfied.
- *Pipe resistance:* Establish the shortest line length and the minimum number of bends so the pipe resistance is minimized.
- *Straight section:* The suction line must be extended straight to the pump inlet. The minimum allowable length of the straight pipe varies with the pump inlet nominal diameter of:
  50A (2B): 500mm
  65A (2½B) or 80A (3B): 8 times longer than the pump inlet I.D.
- *Eccentric reducer:* If the suction line I.D. is wider than the pump inlet and they can not be connected simply due to the different pipe size, use an eccentric reducer between them. Make sure the upper part of it is level so the air won't be trapped in there.

- *No air/gas entrapment:* In general, do not allow any arched line where air may be trapped. In a flooded suction system, lay a suction line in the down-slope (from the tank outlet to the pump inlet) of 1:100 or steeper.
  In a suction lift system; however, lay it in the up-slope to the pump inlet. If plumbing latitude is limited in your facility and you can not avoid an arched suction line in the system, mount an air vent device.

Good examples	Bad examples
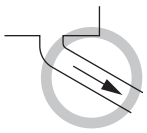 Down-slope from tank outlet to pump inlet (in a flooded suction system)	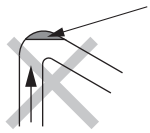 Trapped air in a sharp bend
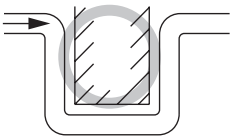	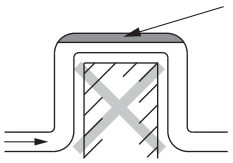 Trapped air in an arched suction line

- *Shut-off valve:* Install the shut-off valve (gate valve) in the suction line for the preventative maintenance that involves taking apart the pump.
- *Flushing line:* Install a flushing line for cleaning the pump after handling a harmful liquid.
- *Line end:* The suction line end should always be 500mm lower than any liquid level for the prevention of entrained air.
- *Foot valve:* In a suction lift system, always install a foot valve to the suction line end or a general back pressure valve in the suction line. The distance between the foot valve and the bottom of a suction tank should be at least 1 to 1.5D from the bottom of the supply tank. (D=Diameter of suction pipe).
- *Piping support:* Use measures to keep the pump connections free from stress. Weight and thermal expansion/contraction of the piping can stress connection points.
- *Air tightness:* Joints of the suction line must be air tight, or output may be affected or the pump is worn badly by friction heat.
- *NPSH:* Always check that the NPSHr is satisfied and cavitation won't upset your system.

NPSHa ≥ NPSHr + 0.5m (0.5m is a margin)

$$NPSHa = 10^6 \times \frac{(Pa-Pv)}{\rho g} \pm hs - hfs$$

NPSHa: Net Positive Suction Head available (m)
NPSHr: Net Positive Suction Head required (m)
Pa: Absolute pressure to the tank liquid surface (MPa)
Pv: Vapour pressure of tank liquid (MPa)
hs: Suction lift (m)
hfs: Suction pipe resistance (m)
ρ: Liquid density (kg/m^3)
g: Acceleration of gravity (9.8 m/sec^2)

Discharge line

When the discharge line of the system is build up, meet the following requirements.

- *Discharge line I.D.:* If the piping is very long, its diameter should be determined by calculating the piping resistance. Otherwise, the specified performance may not be obtained due to increased piping resistance.
- *Discharge valve:* A discharge valve should be positioned around 1m away from the pump outlet. Mount an air vent line between the discharge valve and the pump outlet so entrained air can be expelled from the system successfully. If the back pressure valve is needed, install it between the discharge valve and the pump outlet as well.
- *Pressure gauge:* Install a pressure gauge on the discharge line to monitor a discharge capacity and delivery head.
- *Check valve:* A check valve should be installed if any of the following conditions exists in the piping:
  - Discharge line is longer than 15m.
  - A delivery head is higher than 15m.
  - The top end of the discharge line is located 9m higher than the liquid level of the supply tank.
  - Several pumps are connected in parallel with the same piping.
- *Air vent line:* Provide an air vent line on the discharge line when the horizontal section of the discharge line is longer than 15m.
- *Drain valve:* Install a drain valve as necessary (to empty the plumbing).
- *Piping support:* Use measures to keep the pump connections free from stress. Weight and thermal expansion/contraction of the piping can stress connection points.
- *Priming line:* If the suction lift method is used due to the limitation on plumbing latitude, branch the discharge line and establish a priming system with a priming tank. Also, mount a foot valve at the end of the suction line in the supply tank so the liquid won't get back to the supply tank and empty the suction line when the pump is stopped. The distance between the foot valve and the bottom of the supply tank should be at least 1 to 1.5D from the bottom of the supply tank. (D=Diameter of suction pipe).

Wiring

Wiring for power voltage, earthing and external signals.

Points to be observed

- Electrical work should be performed by a qualified electrician. Always observe local electric codes.
- Do NOT perform wiring work while electric power is ON. Otherwise, an electrical shock or a short circuit may result. Be sure to turn off the power before wiring work.
- Be careful for electric power NOT to be turned on during work.

Power voltage

Electrical wiring and any work on power source must be performed by qualified persons only. It is not the manufacturer's responsibility for any injury and damage due to noncompliance with this notice. Contact us as necessary.

- *Electromagnetic switch:* Select the optimal specification according to the motor to be used (power voltage, capacity, etc.). Purchase separately.
- *Overcurrent protector:* Select the optimal specification according to the motor to be used. Purchase separately.
- *Electric device location:* Install an electromagnetic switch and other electric devices such as a stop button if any, in a control panel. If the control panel is installed out of doors, protect the electric devices from direct sunlight, wind & rain.
- *Pump/Control panel location:* They can be installed either indoors or outdoors (use an indoor use motor indoors only). However, safety measures should be taken so as not to expose the motor and power distribution unit to flooding or other natural environmental elements (rain, snow, direct sun, etc.).

Electrical motor

Check/adjust the motor before operation.

- Read through motor manufacturer's instruction manual before operation.
- Check the rotational direction of the motor before electric wiring.
- Ground the electric motor.
- Use a Star-Delta Starter, a motor soft starter, or an inverter for starting the 5.5kW or larger motor.

Starting methods

Use the star-delta starting method or an inverter to start the pump.

- If the full-voltage starting of the motor with a simple electric power circuit is taken, wiring work will be easy; however, the motor and electric devices are subject to a high striking current that will be 5 times, 6 times, or even 7 times larger than the rated current. This leads to a high starting torque and load to the motor so the use of the inverter is recommended for the safe starting.
- Even if the star-delta starting of the motor is taken, the motor is still subject to a sharp rise of acceleration torque that happens as the circuit transforms from the "Star" shape to the "Delta" shape. This sharp rise can be softened effectively if a proper Star-Delta transform time is determined and set.

Use of an inverter (full-voltage starting)

Use of an inverter allows for control of the motor frequency (revolution), the flow rate, and the delivery head as well as contributes to energy saving and long life. An inverter is used with the full-voltage starting of the motor.

Set the base frequency, the maximum frequency, and the maximum operating voltage, according to the motor specs. The minimum frequency is 25Hz in general. If it's set too low (less than 25Hz), the motor will stumble and heat up as cooling efficiency is lost.

*Consult with your inverter manufacture and your motor manufacture to determine the best combination.
*If the inverter is used for the motor control, an Iwaki DRN series pump protector can not be used.

Sensors

To protect the pump and monitor:

- A motor power current to detect, alert, and stop a significant load change.
- Pressure to detect, alert, and stop a significant pressure change.
- Flow volume to detect, alert, and stop a significant flow change.
- Liquid level to detect, alert, and stop a significant level change of the tank liquid.

*Monitor two or more items above for ensuring safe operation. An Iwaki DRN series pump protector will be a solution. Contact us for detail.

Operation

This section describes pump operation and programming. Run the pump after plumbing and wiring are completed.

Points to be observed

- To keep good cooling efficiency, clean the pump/motor surface at regular intervals.
- Do not run pump dry. When the suction valve is closed, the pump runs dry. If so, internal parts are excessively worn by friction heat and fatal pump damage results.
  *If you notice the pump runs dry, do not open a valve to deliver liquid to the pump. Or heat shock may crack the internal parts of the pump. Leave it for more than one hour to cool them down.
- Check the rotational direction of the pump. Clockwise rotation seen from the motor end is correct.
- Reverse rotation of the motor/pump leads to fatal damage.
- Stop the pump immediately when it is running under cavitation.
- Stop the pump immediately when air is entrained from the suction line.
- Decoupling of the drive magnet and the driven magnet brings about eddy current, Joule heat as the eddy current is lost, and eventually an unacceptable hot motor. Stop the pump immediately and leave it for more than one hour to cool it down. The magnets will be coupled again as the pump is turned ON (or they may not be coupled if they have been demagnetized considerably by the heat.).
- If the motor power is cycled, observe the minimum interval of 10 minutes. Or the internal parts are aged faster or worn excessively.
- Keep liquid temperature change within 80˚C (176˚F) at any time during operation or stop.
- Close the discharge valve and then start the pump to avoid water hammer (and slowly open the discharge valve to the desired level).
- Closed-discharge operation should be within one minute, or friction heat builds up and damages the internal parts of the pump.
- If power is interrupted while the pump is running, turn off the external switch of the pump immediately and close a discharge valve.
- Do not exceed the maximum operating pressure of the pump.
- The surface temperature of the pump or pipe rises high along with liquid temperature in or right after operation. Take preventive measures.

Liquid temperature	Surface temperature (at ambient 40°C=104°F)
80°C (176°F)	80°C (176°F)
100°C (212°F)	90°C (194°F)
120°C (248°F)	110°C (230°F)
150°C (302°F)	130°C (266°F)

- In case the operating noise interrupts communication between operators to secure a safety or adversely affects human health, provide a noise reduction cover.

Model	Noise level
MDM50-32-160/MDM-65-40-160	85dB
MDM50-32-200/MDM-80-50-160	95dB

Before operation

Check plumbing and wiring are correct. Prime the pump and remove air.

Points to be checked

Before operation, check if:

- Connection bolts are tight. Tighten connection bolts at regular intervals as they may become loose over time.
  *To properly hold the rear casing support (161) with the hex head bolts (901.4), unfix the support (183) and motor (800) from the base (890) by loosening the hex head bolts (901.7/901.9) in advance.
- Liquid level in a supply tank is enough so air won't be entrained into the system.

Priming

In a flooded suction system, take the steps below. In a suction lift system, the suction line and the pump need filled with liquid somehow.

Points to be observed
Be sure to turn off power to stop the pump and related devices before service is performed.

1 Open the suction line.

2 Open the air vent line.
Or open the discharge line instead.

Motor rotation check

Check electric wiring is correct and the motor rotates in the correct direction.

1 Close the discharge valve.
The suction line and the pump must be filled with liquid.

2 Turn ON the pump.

3 Run the pump for a very short time (0.5 sec.).
If the inverter is used, slowly raise the frequency to 10-15Hz and then reduce to 0Hz.

4 Check the motor rotates in the direction of the arrow mark.
The correct direction is the CW direction seen from the motor end.

5 Check the motor fan stops smoothly.
If necessary, check the rotating parts of the pump.

Degassing

The air/gas in the pump and plumbing is the obstacle to liquid delivery and needs to be expelled before the pump is started.

1 Open the suction line.

2 Open the air vent line.

If the air vent line is not provided or if its piping resistance is too high, open the discharge valve instead.

NOTE

Do not open the discharge valve too much. Or liquid starts to be pumped up before air is completely expelled.

3 Run the pump for a very short time (0.5 sec.).

If the inverter is used, slowly raise the frequency to 10-15Hz and then reduce to 0Hz.

NOTE

Do not run the pump for a long time. If the pump runs with air or gas, friction heat will build up and damage rotating/sliding parts of the pump.

4 Check the motor fan stops smoothly.

Check the rotating parts of the pump if necessary.

5 Repeat the step 3 and the step 4 until air/gas is expelled completely.

When liquids that generate gas bubbles are delivered or when the suction line is too long, it's going to be hard to remove air/gas. Repeat this momentary run 10 times or more.

6 Close the air vent line.

Commissioning

Read this section before operation.

Points to be observed

- Check for a loose bolt on the pump and plumbing.
- Tighten the hex head bolts (901.4) that hold the rear casing support (161) by 85 N•m. Before tightening these bolts, be sure to loosen the hex head bolts (901.7/901.9) to unfix the support (183) and motor (800) from the base (890). See the Wear part list section on page 38 and identify the parts.
- Do not run the motor in reverse. Or the pump may be damaged.
- Closed-discharge operation should be within one minute, or friction heat builds up and the damages the internal parts of the pump.
- Observe the minimum flow rate, or the self-radiation mechanism does not work effectively to cool down the sliding parts (bearing/spindle) and rotating parts (mouth ring/liner ring).

2P	4P
50L/min	20L/min

Starting process

Take the steps below to start up.

1 Open the suction line.

Adjust the discharge valve to the minimum flow rate.

NOTE

Closed-discharge operation or closed-suction damages the pump. Do not keep a valve closed in operation.

2 Run the pump and check for abnormal noise or vibration.

If necessary, stop the pump and determine/remove the root cause of abnormal noise/vibration.

3 Further open the discharge valve to the desired flow rate and pressure.

Turn the valve slowly so water hammer won't happen.

4 Check for flow, pressure, noise and vibration.

If necessary, stop the pump and determine/remove the root cause of abnormality.

NOTE

If you notice any abnormal or dangerous conditions, suspend operation immediately and inspect/solve problems. See the troubleshooting section as well.

Shut-down process

Take the steps below to shut it down.

Points to be observed

- If pump operation is stopped in cold weather, liquid inside the pump cavity may freeze and damage the pump. Be sure to drain liquid completely. If the liquid is harmful, empty and then flush it out. In case of a short term shut down, which does not allow removal of liquids, use a band heater to prevent liquid from freezing.
- In the event of service power failure, turn the power switch off and close the discharge valve.

1 Close the discharge valve slowly to the minimum flow rate.
Risk of water hammer. Do not close the discharge valve sharply.

2 Turn off the pump.

3 Check the motor fan stops smoothly.
Check the rotating parts of the pump if necessary.

Suspension & Restart

When the system is rebooted, special care needs to be taken depending on system conditions.

Points to be observed

- Do not turn on the pump before it stops rotating completely, or the drive magnet and the driven magnet will be decoupled.
- If the system is empty, return to the priming section in this manual and take the full steps to reboot the pump and the system.

- When handling liquids that generate gas bubbles (e.g. sodium hypochlorite), repeat the degassing process until gas is completely expelled from the pump and plumbing.
- When handling liquids that crystallizes (e.g. salt water), the pump bearing and the spindle may be caught in crystallization. Before the system is rebooted, manually turn the motor fan to see if it rotates free. If not, take apart the pump and clean the inside of the pump.
- At a freezing temperature, the pump bearing and the spindle may be caught in a frozen liquid. Before the system is rebooted, manually turn the motor fan to see if it rotates free. If not, take measures to melt the frozen liquid.
- Empty and clean the pump when it is left unused for a long time. Before the system is rebooted, tighten connection bolts to make sure liquid won't leak.

Maintenance

This section describes troubleshooting, maintenance, wear part replacement, exploded views and specifications.

Points to be observed

- Follow instructions in this manual for replacement of wear parts. Do not disassemble the pump beyond the extent of the instructions.
- Always wear protective clothing such as an eye protection, chemical resistant gloves, a mask and a face shield during disassembly, assembly or maintenance work. The specific solution will dictate the degree of protection. Refer to SDS precautions from the solution supplier.
- Risk of electrical shock. Be sure to turn off power to stop the pump and related devices before service is performed.
- Magnetic force of the pump is powerful. When taking apart or putting together the pump, take measures not to catch the finger in the metal parts.
- The magnet drive pump has a pair of strong magnets (the magnet capsule unit and the drive magnet). The strong magnet field could adversely affect the persons who are assisted by electronic devices such as the pacemaker.

NOTE

- It's not the manufacturer’s responsibility for any failure due to corrosion or erosion occurred in your operating condition.
- When repair is needed to our pumps, contact us or the manufacturer of the machine in which our product is built.
- Be sure to drain chemicals and flush the inside of the pump before return. Or harmful chemicals may spill out in transit.

Troubleshooting

First check the following points. If the following measures do not help remove problems, contact your nearest distributor.

Sign	Possible status	Possible causes	Corrective actions	Possible damage
Unusual vibration/ noise	Pump runs dry.	Pump is not primed.	Prime the pump and the suction line.	• Scratched/cracked sliding/rotating parts • Fused plastic parts • A damaged casing
		An empty tank		
		Closed suction line		
	Pump runs with entrained air.	Air was not fully expelled in the degassing process.	Make sure air is expelled before operation.	• Scratched/cracked sliding/rotating parts • Fused plastic parts • A cracked impeller • A damaged casing
		An air pocket in the suction line	Remove an arched suction line.	
		A low liquid level in the tank	Monitor/observe the minimum liquid level.	
		A broken water-/air-tightness	Tighten connection bolts	

Sign	Possible status	Possible causes	Corrective actions	Possible damage
Unusual vibration/ noise	Cavitation	Pipe resistance of the suction line is too high.	Use a wider/shorter/ straighter pipe.	• Scratched/cracked sliding/rotating parts • Fused plastic parts • A cracked impeller • A damaged casing
		Foreign matters in the suction line	Install a screen baffle in the supply tank.	
		A clogged strainer	Clean it at intervals.	
	Clogged with foreign matters or slurry particles	Foreign matters or slurry particles from the supply tank.	Install a screen baffle in the supply tank.	• Scratched/cracked sliding/rotating parts • Fused plastic parts • A clogged self-radiation path • A cracked impeller • Foreign matters in the impeller • Damaged magnet capsule and rear casing • A damaged casing
	A closed suction line	A closed valve in the suction line	Observe the correct starting process.	• Scratched/cracked sliding/rotating parts • Fused plastic parts • A damaged casing
		A clogged strainer	Clean it at intervals. Monitor the suction line pressure.	
	Too much pump output	The discharge valve is opened too much.	Adjust valve opening. Monitor the motor current as well.	-
		A flow into a branched line.	Use the main line.	
	Loose connection bolts	Rated torque was not observed.	Tighten by the rated torque.	-
		Bolts are loosened in operation.	Tighten bolts at intervals.	
	Pump is not mounted properly.	Pump-baseplate fixing bolts are loose.	Tighten to a higher torque.	-
		No plumbing support	Install plumbing supports.	
		Pump is stumbling.	Select a level and rigid foundation.	
Low discharge pressure	Pump runs dry.	Pump is not primed.	Prime the pump and the suction line.	• Scratched/cracked sliding/rotating parts • Fused plastic parts • A damaged casing
		An empty tank		
		Closed suction line		
	Pump runs with entrained air.	Air was not fully expelled in the degassing process.	Make sure air is expelled before operation.	• Scratched/cracked sliding/rotating parts • Fused plastic parts • A cracked impeller • A damaged casing
		An air pocket in the suction line	Remove an arched suction line.	
		A low liquid level in the tank	Monitor/observe the minimum liquid level.	
		A broken water-/air-tightness	Tighten connection bolts	

Sign	Possible status	Possible causes	Corrective actions	Possible damage
Low discharge pressure	Cavitation	Pipe resistance of the suction line is too high.	Use a wider/shorter/ straighter pipe.	• Scratched/cracked sliding/rotating parts • Fused plastic parts • A cracked impeller • A damaged casing
		Foreign matters in the suction line	Install a screen baffle in the supply tank.	
		A clogged strainer	Clean it at intervals.	
	Clogged with foreign matters or slurry particles	Foreign matters or slurry particles from the supply tank.	Install a screen baffle in the supply tank.	• Scratched/cracked sliding/rotating parts • Fused plastic parts • A clogged self-radiation path • A cracked impeller • Foreign matters in the impeller • Damaged magnet capsule and rear casing • A damaged casing
	A closed suction line	A closed valve in the suction line	Observe the correct starting process.	• Scratched/cracked sliding/rotating parts • Fused plastic parts • A damaged casing
		A clogged strainer	Clean it at intervals. Monitor the suction line pressure.	
	Too much pump output	The discharge valve is opened too much.	Adjust valve opening. Monitor the motor current as well.	-
		A flow into a branched line	Use the main line.	
	Motor runs in reverse.	Wrong electric wiring	Correct wiring.	-
	The drive/driven magnets are decoupled.	Overload operation	Observe the rated motor current.	-
		Water hummer at start up	Remove air from the pump and the discharge line.	
High discharge pressure	The min flow rate is not satisfied.	A closed discharge valve	Adjust the valve to meet the min flow rate.	• Scratched/cracked sliding/rotating parts • Fused plastic parts • A damaged casing
		Pipe resistance of the discharge line is too high.	Adjust the discharge valve, remove air, and clean the strainer.	
Unstable discharge pressure	Entrained air	Air is not expelled completely.	Remove air completely.	• Scratched/cracked sliding/rotating parts • Fused plastic parts • A cracked impeller • A damaged casing
		An air pocket in the suction line	Remove an arched suction line.	
		A low liquid level in the tank	Monitor/observe the minimum liquid level.	
		A broken water-/air-tightness	Tighten connection bolts.	

Sign	Possible status	Possible causes	Corrective actions	Possible damage
Unstable discharge pressure	Cavitation	Pipe resistance of the suction line is too high.	Use a wider/shorter/ straighter pipe.	• Scratched/cracked sliding/rotating parts • Fused plastic parts • A cracked impeller • A damaged casing
		Foreign matters in the suction line	Install a screen baffle in the supply tank.	
		A clogged strainer	Clean it at intervals.	
	Clogged with foreign matters or slurry particles	Foreign matters or slurry particles from the supply tank.	Install a screen baffle in the supply tank.	• Scratched/cracked sliding/rotating parts • Fused plastic parts • A clogged self-radiation path • A cracked impeller • Foreign matters in the impeller • Damaged magnet capsule and rear casing • A damaged casing
Low suction pressure	Cavitation	Pipe resistance of the suction line is too high.	Use a wider/shorter/ straighter pipe.	• Scratched/cracked sliding/rotating parts • Fused plastic parts • A cracked impeller • A damaged casing
		Foreign matters in the suction line	Install a screen baffle in the supply tank.	
		A clogged strainer	Clean it at intervals.	
	A closed suction line	A closed valve in the suction line	Observe the correct starting process.	• Scratched/cracked sliding/rotating parts • Fused plastic parts • A damaged casing
		A clogged strainer	Clean it at intervals. Monitor the suction line pressure.	
Low pump output	Entrained air	Air is not expelled completely.	Remove air completely.	• Scratched/cracked sliding/rotating parts • Fused plastic parts • A cracked impeller • A damaged casing
		An air pocket in the suction line	Remove an arched suction line.	
		A low liquid level in the tank	Monitor/observe the minimum liquid level.	
		A broken water-/air-tightness (suction line)	Tighten connection bolts.	
	Cavitation	Pipe resistance of the suction line is too high.	Use a wider/shorter/ straighter pipe.	• Scratched/cracked sliding/rotating parts • Fused plastic parts • A cracked impeller • A damaged casing
		Foreign matters in the suction line	Install a screen baffle in the supply tank.	
		A clogged strainer	Clean it at intervals.	
	Clogged with foreign matters or slurry particles	Foreign matters or slurry particles from the supply tank.	Install a screen baffle in the supply tank.	• Scratched/cracked sliding/rotating parts • Fused plastic parts • A clogged self radiation path • A cracked impeller • Foreign matters in the impeller • Damaged magnet capsule and rear casing • A damaged casing

Sign	Possible status	Possible causes	Corrective actions	Possible damage
Low pump output	A closed suction line	A closed valve in the suction line	Observe the correct starting process.	• Scratched/cracked sliding/rotating parts • Fused plastic parts • A damaged casing
		A clogged strainer	Clean it at intervals. Monitor the suction line pressure.	
	Motor runs in reverse.	Wrong electric wiring	Correct wiring.	-
	The drive/driven magnets are decoupled.	Overload operation	Observe the rated motor current.	-
		Water hummer at start up	Remove air from the pump and the discharge line.	
No pump output	Pump runs dry.	Pump is not primed.	Prime the pump and the suction line.	• Scratched/cracked sliding/rotating parts • Fused plastic parts • A damaged casing
		An empty tank		
		Closed suction line		
	Pump runs with entrained air.	Air was not fully expelled in the degassing process.	Make sure air is expelled before operation.	• Scratched/cracked sliding/rotating parts • Fused plastic parts • A cracked impeller • A damaged casing
		An air pocket in the suction line	Remove an arched suction line.	
		A low liquid level in the tank	Monitor/observe the minimum liquid level.	
		A broken water-/air-tightness	Tighten connection bolts	
	The min flow rate is not satisfied.	A closed discharge valve	Adjust the valve to meet the min flow rate.	• Scratched/cracked sliding/rotating parts • Fused plastic parts • A damaged casing
		Pipe resistance of the discharge line is too high.	Adjust the discharge valve, remove air, and clean the strainer.	
	Clogged with foreign matters or slurry particles	Foreign matters or slurry particles from the supply tank.	Install a screen baffle in the supply tank.	• Scratched/cracked sliding/rotating parts • Fused plastic parts • A clogged self-radiation path • A cracked impeller • Foreign matters in the impeller • Damaged magnet capsule and rear casing • A damaged casing
	A closed suction line	A closed valve in the suction line	Observe the correct starting process.	• Scratched/cracked sliding/rotating parts • Fused plastic parts • A damaged casing
		A clogged strainer	Clean it at intervals. Monitor the suction line pressure.	
	The drive/driven magnets are decoupled.	Overload operation	Observe the rated motor current.	-
		Water hummer at start up	Remove air from the pump and the discharge line.	

Sign	Possible status	Possible causes	Corrective actions	Possible damage
High motor power current	Clogged with foreign matters or slurry particles	Foreign matters or slurry particles from the supply tank.	Install a screen baffle in the supply tank.	• Scratched/cracked sliding/rotating parts • Fused plastic parts • A clogged self-radiation path • A cracked impeller • Foreign matters in the impeller • Damaged magnet capsule and rear casing • A damaged casing
	Too much pump output	The discharge valve is opened too much.	Adjust valve opening. Monitor the motor current as well.	-
		A flow into a branched line.	Use the main line.	
Low motor power current	Pump runs dry.	Pump is not primed.	Prime the pump and the suction line.	• Scratched/cracked sliding/rotating parts • Fused plastic parts • A damaged casing
		An empty tank		
		Closed suction line		
	Pump runs with entrained air.	Air was not fully expelled in the degassing process.	Make sure air is expelled before operation.	• Scratched/cracked sliding/rotating parts • Fused plastic parts • A cracked impeller • A damaged casing
		An air pocket in the suction line	Remove an arched suction line.	
		A low liquid level in the tank	Monitor/observe the minimum liquid level.	
		A broken water-/air-tightness	Tighten connection bolts	
	Cavitation	Pipe resistance of the suction line is too high.	Use a wider/shorter/straighter pipe.	• Scratched/cracked sliding/rotating parts • Fused plastic parts • A cracked impeller • A damaged casing
		Foreign matters in the suction line	Install a screen baffle in the supply tank.	
		A clogged strainer	Clean it at intervals.	
	The min flow rate is not satisfied.	A closed discharge valve	Adjust the valve to meet the min flow rate.	• Scratched/cracked sliding/rotating parts • Fused plastic parts • A damaged casing
		Pipe resistance of the discharge line is too high.	Adjust the discharge valve, remove air, and clean the strainer.	
	Clogged with foreign matters or slurry particles	Foreign matters or slurry particles from the supply tank.	Install a screen baffle in the supply tank.	• Scratched/cracked sliding/rotating parts • Fused plastic parts • A clogged self-radiation path • A cracked impeller • Foreign matters in the impeller • Damaged magnet capsule and rear casing • A damaged casing
	A closed suction line	A closed valve in the suction line	Observe the correct starting process.	• Scratched/cracked sliding/rotating parts • Fused plastic parts • A damaged casing
		A clogged strainer	Clean it at intervals. Monitor the suction line pressure.	

Sign	Possible status	Possible causes	Corrective actions	Possible damage
Low motor power current	Motor runs in reverse.	Wrong electric wiring	Correct wiring.	-
	The drive/driven magnets are decoupled.	Overload operation	Observe the rated motor current.	-
		Water hummer at start up	Remove air from the pump and the discharge line.	
Unstable motor power current	Entrained air	Air is not expelled completely.	Remove air completely.	• Scratched/cracked sliding/rotating parts • Fused plastic parts • A cracked impeller • A damaged casing
		An air pocket in the suction line	Remove an arched suction line.	
		A low liquid level in the tank	Monitor/observe the minimum liquid level.	
		A broken water-/air-tightness	Tighten connection bolts.	
	Cavitation	Pipe resistance of the suction line is too high.	Use a wider/shorter/straighter pipe.	• Scratched/cracked sliding/rotating parts • Fused plastic parts • A cracked impeller • A damaged casing
		Foreign matters in the suction line	Install a screen baffle in the supply tank.	
		A clogged strainer	Clean it at intervals.	
Hot pump surface	The min flow rate is not satisfied.	A closed discharge valve	Adjust the valve to meet the min flow rate.	• Scratched/cracked sliding/rotating parts • Fused plastic parts • A damaged casing
		Pipe resistance of the discharge line is too high.	Adjust the discharge valve, remove air, and clean the strainer.	
Hot motor surface	Too much pump output	The discharge valve is opened too much.	Adjust valve opening. Monitor the motor current as well.	-
		A flow into a branched line.	Use the main line.	
A leak from a connection point	Loose connection bolts	Rated torque was not observed.	Tighten by the rated torque.	Gaskets becomes inelastic if liquid temperature is too high.
		Bolts are loosened in operation.	Tighten bolts at intervals.	
A leak from the bracket	Pump runs dry.	Pump is not primed.	Prime the pump and the suction line.	-
		An empty tank		
		Closed suction line		
	Entrained air	Air is not expelled completely.	Remove air completely.	• Scratched/cracked sliding/rotating parts • Fused plastic parts • A cracked impeller • A damaged casing • The rear casing hits against the drive magnet.
		An air pocket in the suction line	Remove an arched suction line.	
		A low liquid level in the tank	Monitor/observe the minimum liquid level.	
		A broken water-/air-tightness	Tighten connection bolts.	

Sign	Possible status	Possible causes	Corrective actions	Possible damage
A leak from the bracket	Cavitation	Pipe resistance of the suction line is too high.	Use a wider/shorter/ straighter pipe.	• Scratched/cracked sliding/rotating parts • Fused plastic parts • A cracked impeller • A damaged casing • The rear casing hits against the drive magnet.
		Foreign matters in the suction line	Install a screen baffle in the supply tank.	
		A clogged strainer	Clean it at intervals.	
	The min flow rate is not satisfied.	A closed discharge valve	Adjust the valve to meet the min flow rate.	• Scratched/cracked sliding/rotating parts • Fused plastic parts • A damaged casing • The rear casing hits against the drive magnet.
		Pipe resistance of the discharge line is too high.	Adjust the discharge valve, remove air, and clean the strainer.	
	Clogged with foreign matters or slurry particles	Foreign matters or slurry particles from the supply tank.	Install a screen baffle in the supply tank.	• Scratched/cracked sliding/rotating parts • Fused plastic parts • A clogged self-radiation path • A cracked impeller • Foreign matters in the impeller • Damaged magnet capsule and rear casing • A damaged casing • The rear casing hits against the drive magnet.
	A closed suction line	A closed valve in the suction line	Observe the correct starting process.	• Scratched/cracked sliding/rotating parts • Fused plastic parts • A damaged casing • The rear casing hits against the drive magnet.
		A clogged strainer	Clean it at intervals. Monitor the suction line pressure.	
	Water hummer	Sharp valve operation (discharge line)	Slowly operate the valve.	• A damaged casing • The rear casing hits against the drive magnet.
		An air pocket in the discharge line	Remove an arched discharge line.	

Inspection

Perform daily and periodic inspection to keep the best pump performance and safety.

Daily inspection

Check the following points. If you notice any abnormal or dangerous conditions, suspend operation immediately and inspect/solve problems. See the Troubleshooting section as necessary.
When wear parts come to the life limit, replace them with new ones. Contact your distributor for detail.

No.	States	Points to be checked
1	Evidence of a leak	• A leak point. Do not go without solving problems.
2	Pumping	• If liquid is pumped. Use the flow meter.
		• If the suction pressure and the discharge pressure are at the rated level.
		• If the liquid level in the tank is not too low.
		• If liquid has deteriorated, crystallized or settled.
3	Noise and vibration	• If abnormal noise or vibration occurs. They are signs of abnormal operation.
4	Air ingress from the pump head joints and the suction line	• If a leak occurs. • If pumped liquid includes air bubbles, check lines for leakage and retighten as necessary.
5	Motor power current	• If the motor power current is too high. That's the sign of overpressure. See the motor spec for the rated current.
6	Parameters	• If pressure, a flow rate, or the motor power current is greatly changed. They are signs of abnormal operation. See the Troubleshooting section and take effective measures.
7	A spare pump	• If a spare pump is stored, run it from time to time to keep it ready for operation at any time when needed.

Periodic inspection

To ensure efficient and smooth operation, take apart the pump and check the internal conditions at regular intervals (6 months). Be careful not to have a big impact on internal sliding parts and plastic parts. Since the magnets used in the pump are powerful, be careful not to catch your fingers or hand between them during disassembly or assembly. Also, keep the magnet unit away from any electronic device that could be affected by a strong magnetic field.

Part names	Points to be checked	Measures
Drive magnet	Wear tracks	Contact us.
	If the drive magnet is correctly mounted with hex. socket set screws and they are not loose.	Remount the drive magnet to the drive shaft and tighten the screws.
	Decentering of magnet and motor shaft (Max.1/10mm)	Retighten the hex. socket set screws or check the motor. Contact us as necessary.
Rear casing	Wear tracks	Contact us.
	Cracked wet ends	
	Worn-out rear thrust ring	
	Worn-out spindle	
	Dirty parts	Clean parts.
Magnet capsule (driven magnet)	Wear tracks	Contact us.
	Cracks	
	Worn-out bearing. See next page.	
	Loose impeller	
Impeller	Worn-out mouth ring. See next page.	Contact us.
	Cracks	
	Clogged impeller	Clean the impeller.
	Deformation	Contact us.
Front casing	Dirty wet ends	Clean parts.
	Cracks	Contact us.
	Cracked/Worn-out liner ring	
	Cracked gasket	
	Wear tracks	
	Clogged drain port or air vent port	Clean the port. If necessary, contact us.
Spindle	Cracks	Contact us.
	Worn-out spindle. See next page.	

Wear limits of bearing and spindle

Check wear degree of the bearing and spindle.

Model	Bearing I.D.		Spindle O.D.	
	Before use	Wear limit	Before use	Wear limit
MDM50-32-160/MDM65-40-160	26mm	27mm	26mm	25mm
MDM50-32-200/MDM80-50-160	30mm	31mm	30mm	29mm

- If the clearance between the bearing and spindle exceeds 1mm, replace both the bearing and spindle together, regardless of whether the wear limit is exceeded.
- Initial wear may appear in the sliding part during the early stages of operation. This should not be mistaken for an abnormal condition.

Wear limits of mouth ring

Check wear degree of the mouth ring.

Model	Mouth ring thickness	
	Initial thickness	Wear limit
MDM50-32-160	8mm	6mm
MDM50-32-200	9mm	7mm
MDM65-40-160		
MDM80-50-160		

The step between the surfaces of the mouth ring and the impeller upon shipment is 2mm. Replacing the mouth ring is recommended before this step is reduced to zero.

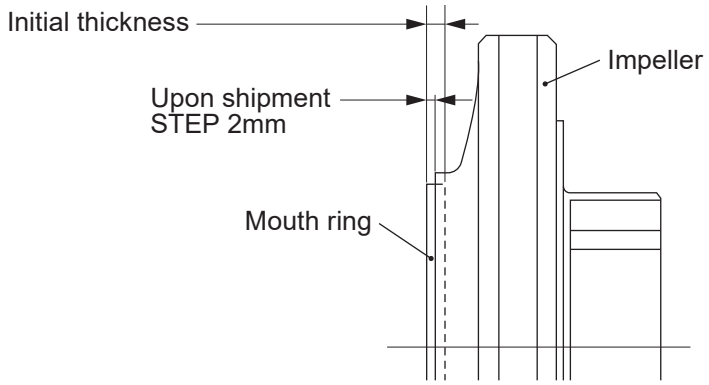

Ball bearing life

The lifespan of the ball bearings are various depending on working temperature.

Parts No.	Parts name	Estimated life	Working temperature
321.1/ 321.2	Ball bearing	15,000 hours	*0 - 50°C (32 - 122°F)*
		7,500 hours	*50 - 70°C (122 - 158°F)*

- The higher temperature, the faster deterioration of grease applied on the ball bearings. Maintain the outer race temperature of the ball bearings below 70°C.
- Operation under mechanical vibration may result in premature wear of the ball bearings. Make daily inspection with a vibration sensor/meter to monitor vibration and to replace the ball bearing immediately when abnormality is detected.
- Operation in corrosive atmosphere may result in premature wear of the ball bearings.
- Replace the shaft seal (420) at the time of ball bearing replacement.
- This pump uses grease-packed double shielded bearings (ZZ type). Do not re-pack grease into the ball bearing. Replace them at the end of life.

Wear part replacement

Appropriate spare parts are necessary to ensure continued pump operation. Expendable parts shown below should always be kept on hand. When placing orders, supply the following information.

1. Part names and part number (see the diagram on page 38.)
2. Pump model identification code and manufacturing number (see the pump nameplate.)
3. Drawing number (if you have received a certified drawing)

Precautions

- Solution in the discharge line may be under pressure. Release the pressure from the discharge line before disconnecting plumbing or disassembly of the pump to avoid solution spray.
- Rinse and clean wet ends thoroughly with tap water.

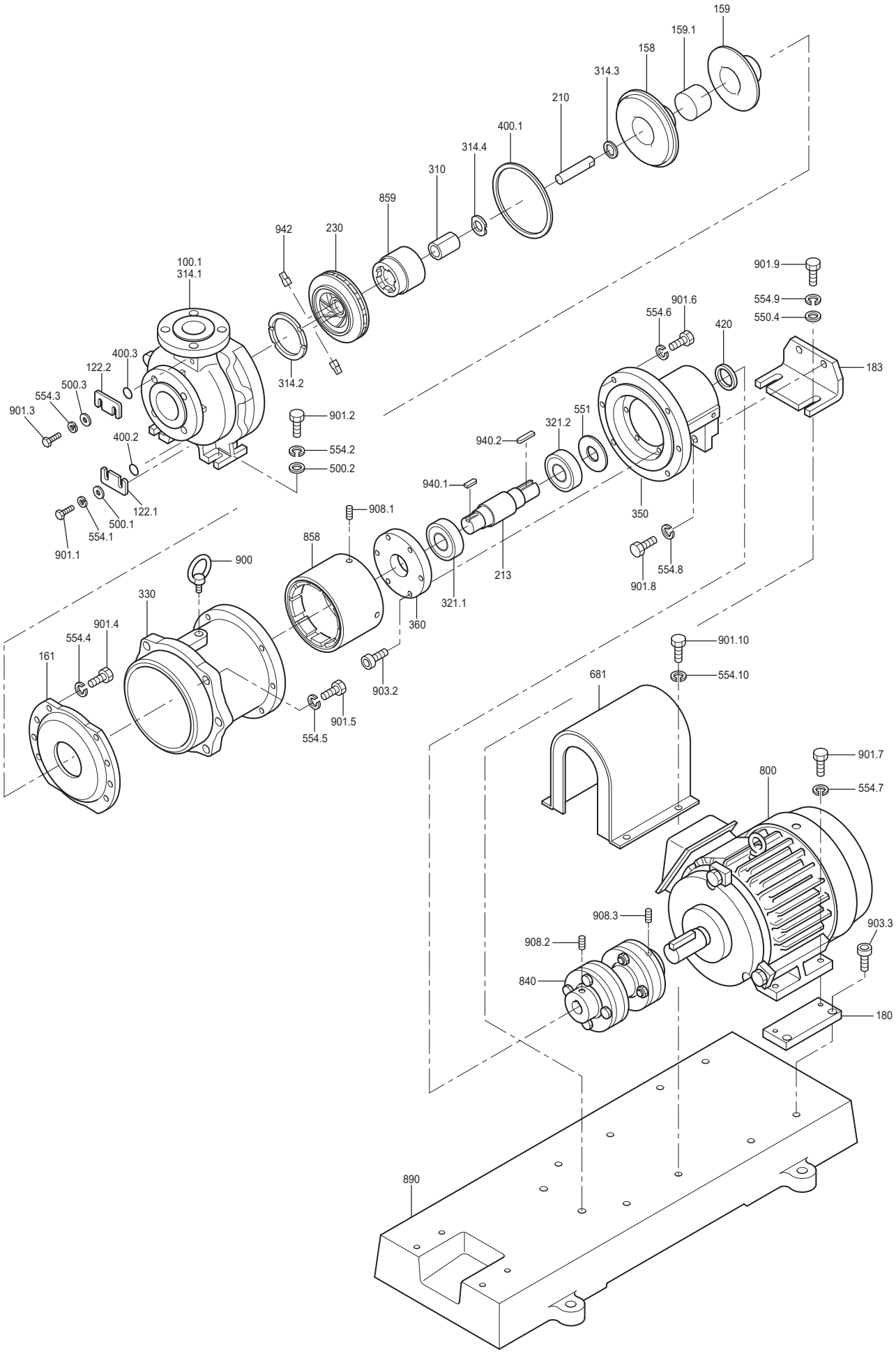
159
159.1
158
314.3
210
400.1
314.4
310
859
942
230
100.1
314.1
314.2
400.3
122.2
500.3
554.3
901.3
400.2
122.1
500.1
554.1
901.1
901.2
554.2
500.2
901.9
554.9
550.4
554.6
901.6
420
183
940.2
321.2
551
940.1
350
554.8
901.8
213
908.1
858
900
321.1
360
330
901.4
554.4
161
903.2
554.5
901.5
901.10
554.10
681
901.7
554.7
800
908.3
908.2
840
903.3
180
890

NO.	PARTS NAME	WET ENDS	Q'ty	PARTS CODE				NOTES
				MDM 50-32-160	MDM 50-32-200	MDM 65-40-160	MDM 80-50-160	
100.1+ 314.1	Front casing	PKK	1	MDM1007	MDM1013	MDM1009	MDM1011	With drain hole
			1	MDM1006	MDM1012	MDM1008	MDM1010	Without drain hole
122.1	Drain plate		1	MDM0009				
122.2	Air vent plate		1	MDM0009				
158	Rear casing	PKK	1	MDM0210	MDM0370	MDM0210	MDM0370	
			1	MDM1014	MDM0877	MDM1014	MDM0877	"H"&"T" temp type
159	Rear casing cover		1	MDM0212	MDM0119	MDM0212	MDM0119	
159.1	Rear casing cover UNIT		1	MDM1032	MDM0908	MDM1032	MDM0908	"H"&"T" temp type
161	Rear casing support		1	MDM1015	MDM1016	MDM1015	MDM1016	
183	Support		1	MDM1017	MDM1018	MDM1017	MDM1018	
210	Spindle	PKK	1	MDM0121	MDM0372	MDM0121	MDM0372	
213	Drive shaft		1	MDM1031				
230	Impeller		1	Refer to impeller parts list				
230+ 314.2	Impeller ass'y		1					
	Impeller/Magnet capsule ass'y		1					
310	Bearing	PKK	1	MDM0123	MDM0735	MDM0123	MDM0374	
314.2	Mouth ring	PKK	1	MDM0018	MDM0488	MDM0488	MDM0376	
314.3	Rear thrust ring	PKK	1	MDM0614	MDM0615	MDM0614	MDM0615	
314.4	Rear ring	PKK	1	MDM0126				
321.1	Ball bearing	6308ZZ	1	MDM1020				
321.2	Ball bearing	6208ZZ	1	MDM1019				
330	Bracket		1	MDM1021	MDM1022	MDM1021	MDM1022	
350	Bearing housing		1	MDM1023				
360	Bearing cover		1	MDM1024				
400.1	Gasket, casing		1	MDM0214	MDM0130	MDM0214	MDM0130	
400.2	Gasket, drain		1	MDM0025				With drain type
400.3	Gasket, air vent		1	MDM0025				With drain type
500.1	Plain washer		2	MDM0026				
500.3	Plain washer		2	MDM0026				
551	Wave washer		1	MDM1025				
554.1	Spring washer		2	MDM0028				
554.3	Spring washer		2	MDM0028				
554.4	Spring washer		8/10	MDM0490				32-1/40-1: 8EA, 32-2/50-1: 10EA
554.5	Spring washer		4	MDM0029				
554.6	Spring washer		4	MDM0029				
554.7	Spring washer		2	MDM0029				
554.8	Spring washer		2	MDM0029				
858	Drive magnet unit	C040/C055/C075	1	MDM1026				
		C110/C150	1		MDM1028		MDM1028	
		C040-C150	1	MDM1027				"T" temp type
859	Magnet capsule unit	C040/C055/C075	1	MDM0287				Standard temp type
		C110/C150	1		MDM0469		MDM0469	Standard temp type
900	Eye bolt		1	MDM0036				
901.1	Hex. head bolt		2	MDM0037				
901.3	Hex. head bolt		2	MDM0037				
901.4	Hex. head bolt		8/10	MDM0491				32-1/40-1: 8EA, 32-2/50-1: 10EA
901.5	Hex. head bolt		4	MDM0136				
901.6	Hex. head bolt		4	MDM0136				
901.8	Hex. head bolt		2	MDM0042				
903.2	Hex. socket head cap screw		6	MDM0043				
908.1	Hex. socket set screw		2	MDM0044				
940.1	Key		1	MDM1030				
942	Pin impeller		2	MDM0138				

Impeller part list

If you need the new impeller, contact us with the pump model code and the MFG #. They are shown on the spec label of the pump. Note the "Nominal" impeller O.D. may be different from the actual impeller O.D. as some adjustment in our factory is needed to optimize the pump performance.

■ Standard temperature type

NO.	PARTS NAME	IMPELLER O.D	MOTOR OUTPUT	Q'TY	PARTS CODE			
					MDM 50-32-160	MDM 50-32-200	MDM 65-40-160	MDM 80-50-160
230	Impeller	225		1		MDM0740		
		220		1		MDM0741		
		210		1		MDM0742		
		200		1		MDM0743		
		190		1		MDM0744		
		180		1		MDM0745		
		170		1	MDM0654	MDM0746	MDM0669	MDM0683
		165		1	MDM0215		MDM0379	MDM0289
		160		1	MDM1033	MDM0747	MDM01035	MDM0290
		150		1	MDM0217		MDM0476	MDM0291
		140		1	MDM0219		MDM0477	MDM0292
		130		1	MDM0220		MDM0478	MDM0293
		120		1	MDM0221		MDM0479	MDM0294
		110		1			MDM0480	MDM0295
230+ 314.2	Impeller ass'y	225		1		MDM0853		
		220		1		MDM0854		
		210		1		MDM0855		
		200		1		MDM0856		
		190		1		MDM0857		
		180		1		MDM0858		
		170		1	MDM0655	MDM0859	MDM0670	MDM0684
		165		1	MDM0223		MDM0296	MDM0380
		160		1	MDM1034	MDM0860	MDM1036	MDM0381
		150		1	MDM0225		MDM0298	MDM0382
		140		1	MDM0227		MDM0299	MDM0383
		130		1	MDM0228		MDM0300	MDM0384
		120		1	MDM0229		MDM0301	MDM0385
		110		1			MDM0302	MDM0386
230+ 310+ 314.2+ 314.4+ 859+ 942	Impeller/magnet capsule ass'y	225	4.0/5.5/7.5kw	1		MDM0756		
		220		1		MDM0757		
		210		1		MDM0758		
		200		1		MDM0759		
		190		1		MDM0760		
		180		1		MDM0761		
		170		1		MDM0762		
		165		1	MDM0580		MDM0310	MDM0394
		160		1	MDM1077	MDM0763	MDM1078	MDM0395
		150		1	MDM0582		MDM0312	MDM0396
		140		1	MDM0584		MDM0313	MDM0397
		130		1	MDM0585		MDM0314	MDM0398
		120		1	MDM0586		MDM0315	MDM0399
		110		1			MDM0316	MDM0400

NO.	PARTS NAME	IMPELLER O.D	MOTOR OUTPUT	Q'TY	PARTS CODE			
					MDM 50-32-160	MDM 50-32-200	MDM 65-40-160	MDM 80-50-160
230+ 310+ 314.2+ 314.4+ 859+ 942	Impeller/magnet capsule ass'y	225	11/15kw	1		MDM0861		
		220		1		MDM0862		
		210		1		MDM0863		
		200		1		MDM0864		
		190		1		MDM0865		
		180		1		MDM0866		
		170		1		MDM0867		
		165		1				MDM0401
		160		1		MDM0868		MDM0402
		150		1				MDM0403
		140		1				MDM0404
		130		1				MDM0405
		120		1				MDM0406
		110		1				MDM0407

■ "H" liquid temperature type

NO.	PARTS NAME	IMPELLER O.D	MOTOR OUTPUT	Q'TY	PARTS CODE
					MDM50-32-200
230+ 314.2+	Impeller/magnet capsule ass'y	225	4.0/5.5/7.5kw	1	MDM0812
		220		1	MDM0813
		210		1	MDM0814
		200		1	MDM0815
		190		1	MDM0816
		180		1	MDM0817
		170		1	MDM0818
		160		1	MDM0819
		225	11/15kw	1	MDM0820
		220		1	MDM0821
		210		1	MDM0822
		200		1	MDM0823
		190		1	MDM0824
		180		1	MDM0825
		170		1	MDM0826
		160		1	MDM0827
230+ 310+ 314.2+ 314.4+ 859+ 942	Impeller/magnet capsule ass'y	225	4.0/5.5/7.5kw	1	MDM0836
		220		1	MDM0837
		210		1	MDM0838
		200		1	MDM0839
		190		1	MDM0840
		180		1	MDM0841
		170		1	MDM0842
		160		1	MDM0843
		225	11/15kw	1	MDM0844
		220		1	MDM0845
		210		1	MDM0846
		200		1	MDM0847
		190		1	MDM0848
		180		1	MDM0849
		170		1	MDM0850
		160		1	MDM0851

*Welded impeller-Magnet capsule are not detachable.

*The H type impeller of the MDM50-32-160, MDM65-40-160 and MDM80-50-160 are sharing with the standard model.

■ "T" liquid temperature type

NO.	PARTS NAME	IMPELLER O.D.	MOTOR OUTPUT	Q'TY	PARTS CODE			
					MDM 50-32-160	MDM 50-32-200	MDM 65-40-160	MDM 80-50-160
230+ 314.2	Impeller-Magnet capsule ass'y	225	All outputs	1		MDM0820		
		220		1		MDM0821		
		210		1		MDM0822		
		200		1		MDM0823		
		190		1		MDM0824		
		180		1		MDM0825		
		170		1		MDM0826		
		165		1	MDM1037		MDM1043	MDM1050
		160		1	MDM1038	MDM0827	MDM1044	MDM1051
		150		1	MDM1039		MDM1045	MDM1052
		140		1	MDM1040		MDM1046	MDM1053
		130		1	MDM1041		MDM1047	MDM1054
		120		1	MDM1042		MDM1048	MDM1055
		110		1			MDM1049	MDM1056
230+ 310+ 314.2+ 314.4+ 859+ 942	Impeller-Magnet capsule ass'y	225		1		MDM0844		
		220		1		MDM0845		
		210		1		MDM0846		
		200		1		MDM0847		
		190		1		MDM0848		
		180		1		MDM0849		
		170		1		MDM0850		
		165		1	MDM1057		MDM1063	MDM1070
		160		1	MDM1058	MDM0851	MDM1064	MDM1071
		150		1	MDM1059		MDM1065	MDM1072
		140		1	MDM1060		MDM1066	MDM1073
		130		1	MDM1061		MDM1067	MDM1074
		120		1	MDM1062		MDM1068	MDM1075
		110		1			MDM1069	MDM1076

*Welded impeller-Magnet capsule are not detachable.

Disassembly/Assembly

Points to be observed

- Follow instructions in this manual for replacement of wear parts. Do not disassemble the pump beyond the extent of the instructions.
- Always wear protective clothing such as an eye protection, chemical resistant gloves, a mask and a face shield during disassembly, assembly or maintenance work. The specific solution will dictate the degree of protection. Refer to SDS precautions from the solution supplier.
- Risk of electrical shock. Be sure to turn off power to stop the pump and related devices before service is performed.
- Magnetic force of the pump is powerful. When taking apart or putting together the pump, take measures not to catch the finger in the metal parts.
- The magnet drive pump has a pair of strong magnets (the magnet capsule unit and drive magnet). The strong magnet field could adversely affect the persons who are assisted by electronic devices such as the pacemaker.

Before disassembly

1 Turn off the power and stop the pump.

2 Close the suction line and the discharge line.

3 Tag motor wires with U(R), V(S), and W(T) codes.
Make sure the motor turns in the correct direction after maintenance is finished.

■ Necessary tools

No.	Tools	Size	Q'ty
1	Spanner	13mm/19mm/24mm	1 each
2	Hex wrench	4mm/5mm	1 each
3	Bearing press (plastic round bar)	ø34×100L	1 each
4	Plastic welder or industrial dryer	-	1
5	Handpress	-	1
6	Drivers	-	1
7	Longnose pliers	-	1
8	Plastic hammer	-	1
9	Bar	-	2
10	Belt wrench	-	1
11	Puller	-	1

Separation of the motor from the pump

1 Remove the hex. head bolt (901.10) and the coupling cover (681).

2 Remove the coupling spacer.

If necessary, remove hubs as well. See the manufacturer's instructions for handling the coupling.

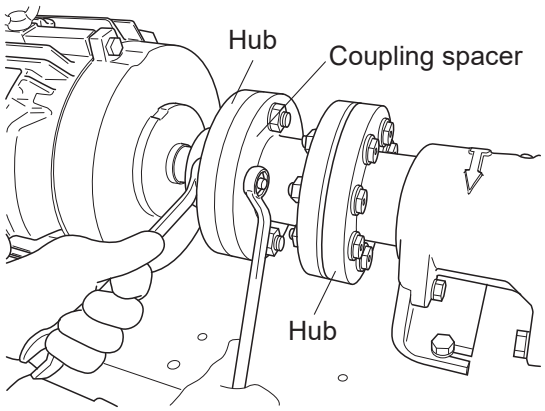

3 Remove mounting bolts (901.9) which are fixing the support (183) to the baseplate (890).

4 Allow sufficient space to remove the bearing housing.

Lift and move the motor unit backward. Or disconnect the pump unit from pipework and move it forward.

Pump disassembly

1 For the pump with the drain port, remove the hex head bolts (901.1) and the drain plate (122.1) to drain liquid out of the pump. Flush out remains with clean water.
For the pump without the drain port, chemically neutralize the liquid in the pump and plumbing, and open a drain valve in the suction line to empty the pump. Flush out remains with clean water.

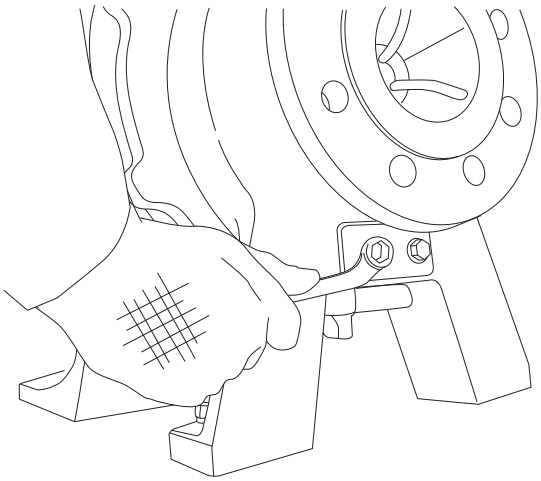

NOTE
- Solution in the discharge line may be under pressure. Release the pressure from the pump and discharge line before disconnecting plumbing or disassembly of the pump to avoid solution spray.
- Try to slowly loosen the hex head bolts just in case the pressure remains in the pump.

2 Remove the mounting bolts (901.5) of the bracket (330).

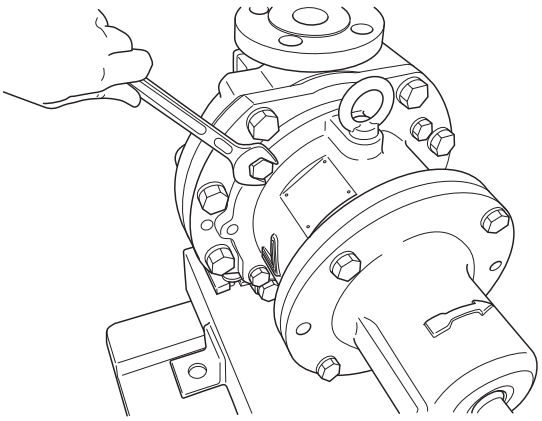

3 Use the attached back pull-out bolts to separate the bracket from the pump.

Thread two bolts through the bracket, one on each side of casing. Alternate from side to side to jack the front casing off the bracket evenly to the distance of 75mm.

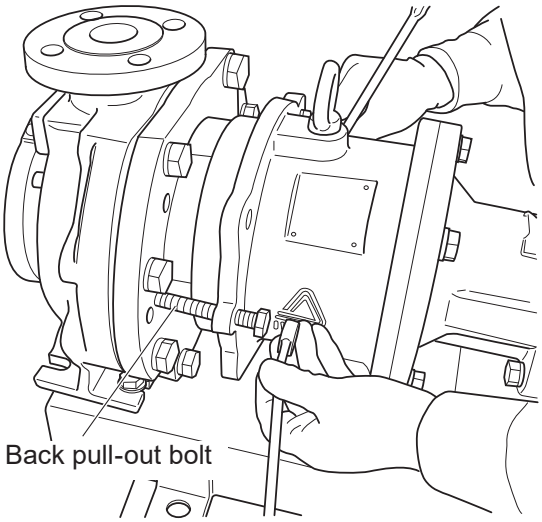

4 Use an overhead crane or any other proper transporting machine to catch/hold the bearing housing and bracket horizontally and pull them back.

While they are lifted up, make sure the drive magnet (858) does not hit the rear casing (158).

5 Remove the hex. head bolts (901.4) and the rear casing supports (161).

If the rear casing support sticks to the cover (100.1), leverage a bar. Be careful not to bite the plastic parts and gaskets with the bar.

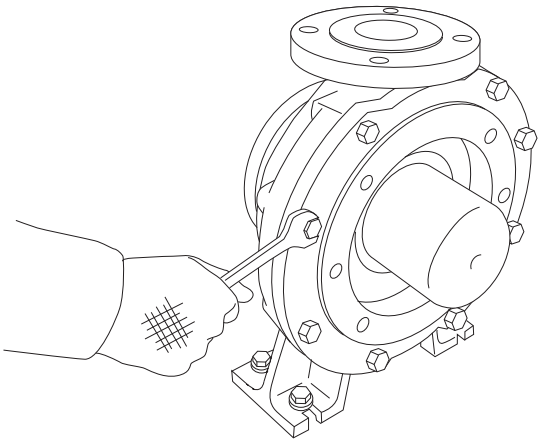

6 Pull out the rear casing cover (159) from the rear casing (158).

If the rear casing cover is difficult to remove, rotate slightly as you pull it from the front casing. If necessary, use a belt wrench and softly turn the rear casing cover.

*Do not damage the plastic rear casing.

*The impeller (230) and the magnet capsule unit (859) come out together with the rear casing. Do not drop.

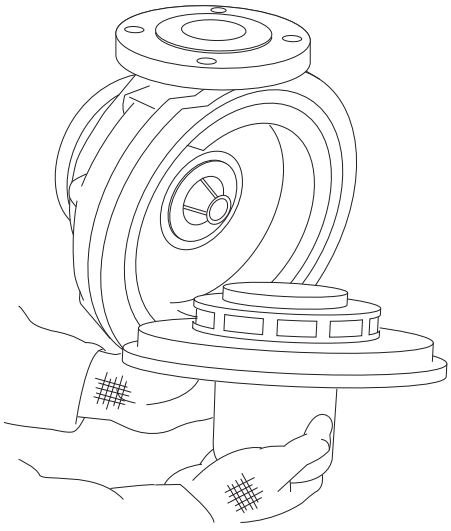

Impeller/Bearing removal

1 Stand up two weld tabs on the rear ring (314.4) using a plastic welder or an industrial dryer.

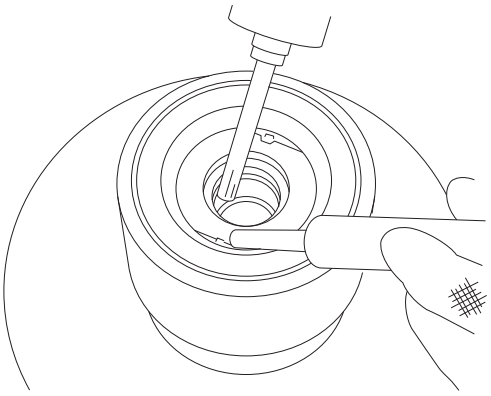

2 Use a hand press and plastic round bar (34mm O.D., 100mm in length) to push the bearing (310) out of the magnet capsule unit.

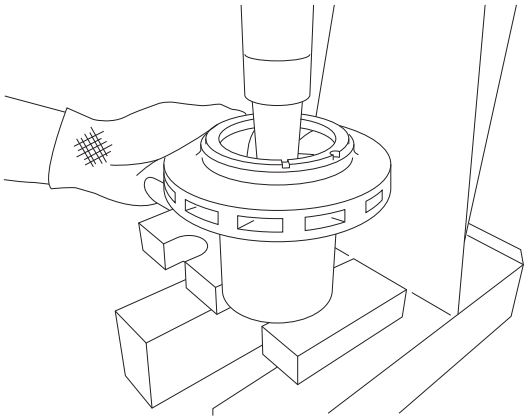

3 Push off the impeller pins (942).

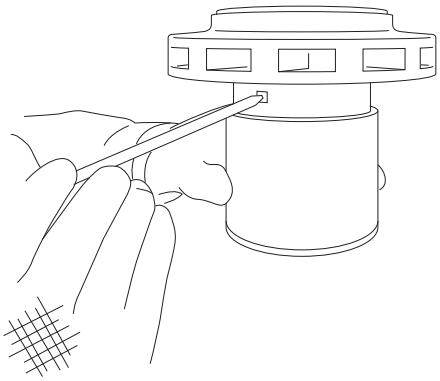

4 Detach the impeller from the magnet capsule unit.

Use a plastic hummer if necessary.

For the "H/T" liquid temperature types, the impeller and the magnet capsule are not detachable. They are welded together.

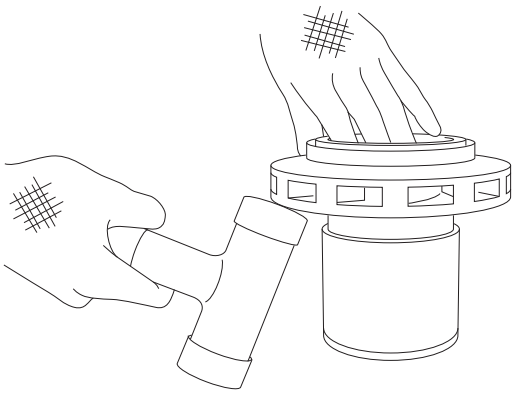

Mouth ring replacement

1 Heat the tabs on the mouth ring (314.2) with a plastic welder or an industrial dryer and open them up.

Remove the worn mouth ring. If necessary, immerse the impeller into a hot water (90°C/194°F) for easier removal.

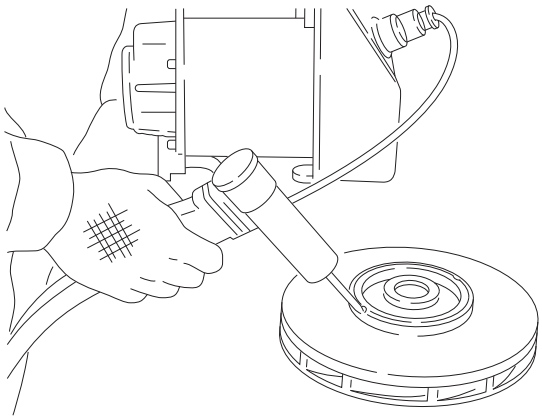

2 Replace the new mouth ring and use a plastic welder or an industrial dryer to hold it with tabs.

If necessary, immerse the impeller into a hot water (90°C/194°F) for easier mounting.

Spindle replacement

1 Simply remove the spindle (210) from the rear casing.

- The spindle is slightly pressed into the rear casing.
- Holding the worn spindle in one hand and rear casing in the other, rock the spindle slightly as you pull them apart.

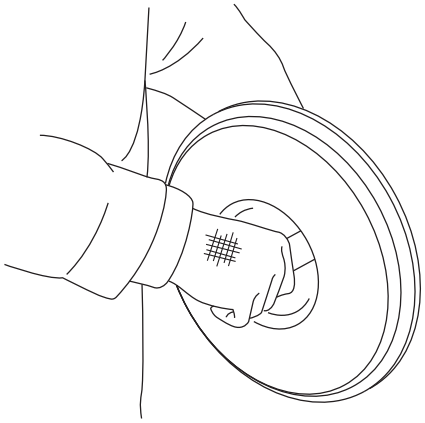

2 Align and insert the rear thrust ring (314.3) and spindle into the rear casing by hand.

- Clean any foreign matter or build-up on the rear casing.
- Make sure that rear thrust ring grooves are facing forwards (to the impeller side).
- Use a hand press if the spindle is difficult to insert into the rear casing.

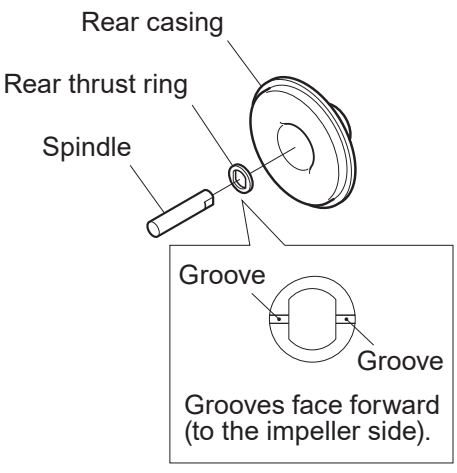

Impeller/Bearing mounting

1 Align and attach the impeller onto the magnet capsule unit.

- Ensure that the impeller has bottomed within the magnet capsule unit and the impeller securing ports are aligned.
- If the impeller does not go in easily, warm the magnet capsule unit in hot water about 90°C/194°F

2 Insert impeller pins.

- Use needle nose pliers to correctly position pins in impeller and magnet capsule unit.
- If the impeller pins do not go in easily, warm the impeller and magnet capsule unit in hot water about 90°C/194°F before putting in the pins.

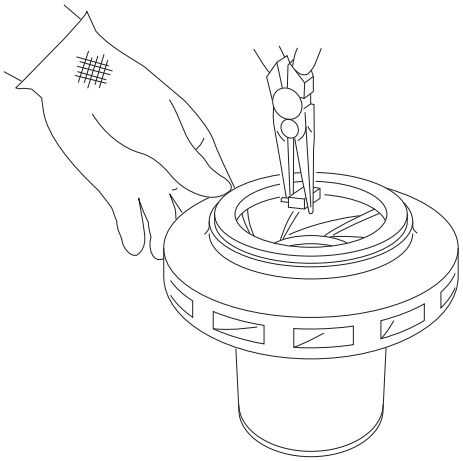

3 Use a hand press and a plastic round bar (34mm O.D., 100mm in length) to press the bearing (310) into the magnet capsule unit.

*Do not use excessive force that may break the plastic/ceramic mouth ring.

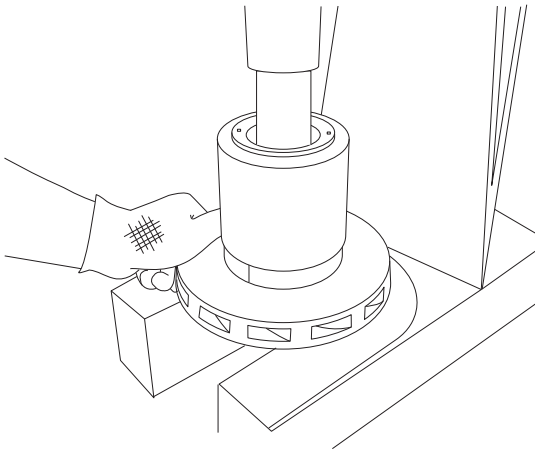

4 Use a hand press to press the new rear ring (314.4) into the magnet capsule unit.

5 Use a plastic welder or an industrial dryer to hold the rear ring with tabs.

Bearing housing disassembly

1 Remove the hex. head bolts (901.6) and the bracket from the bearing housing.

Strong magnetic force is attracting the bracket.

Make sure the bracket does not hit the drive magnet unit.

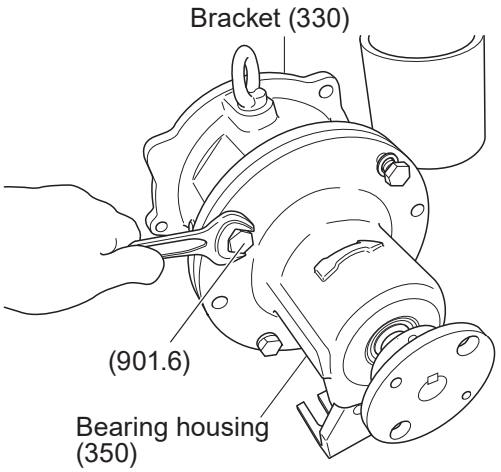

2 Loosen the hex. socket set screws (908.1) and demount the drive magnet unit (858) from the drive shaft.

If necessary, use a claw bar or a puller. Protect the inner surface of the drive magnet with a thick cloth or plastic pipe. Heating the boss of the drive magnet unit with an industrial dryer will help easy removal.

NOTE

The drive magnet unit may drop off when using a lever. Assistance by another person is required.

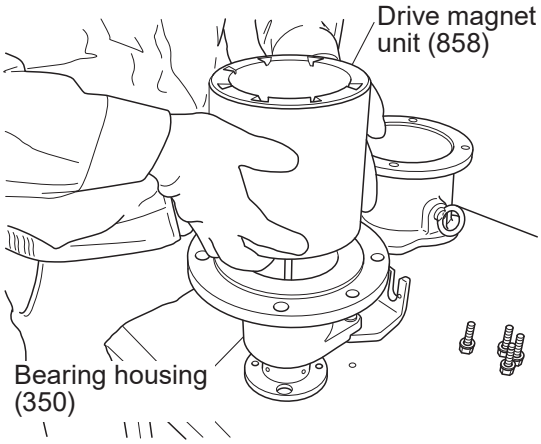

3 Remove the key (940.1).

4 Remove the hex. socket head cap screws (903.2) and the bearing cover (360) from the bearing housing.

The bearing housing (350) can slip down inadvertently. Hold the bearing housing while loosing the hex head bolts.

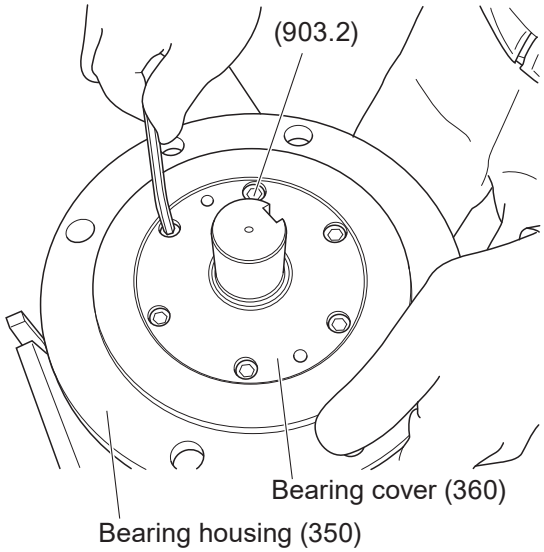

5 Loosen the hex. socket set screws (908.2) to demount the coupling hub and the key (940.2) from the drive shaft.

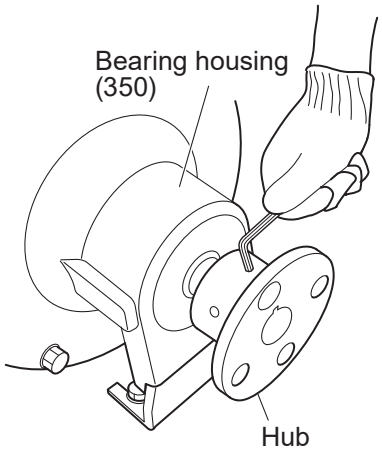

6 Pull the drive shaft (213) out of the bearing housing and remove the wave washer (551).

If necessary, tap the shaft end with a plastic hammer to push it out straight.

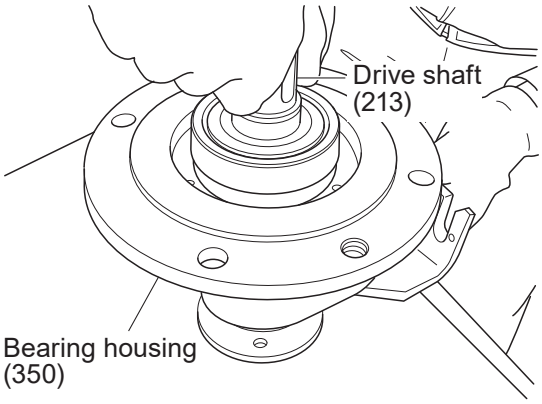

7 Use a puller to remove the ball bearings (321.1/321.2) from the drive shaft.

NOTE

Do not damage the drive shaft end where the shaft seal (420) is mounted. See page 38 as well.

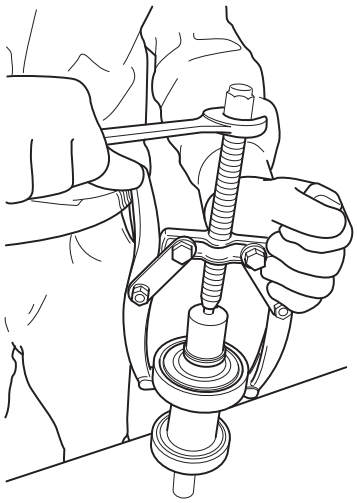

8 If the old shaft seal (420) needs replaced, use a slotted screw driver to gently hook and remove the seal from the bearing housing.

If the oil seal groove of the bearing housing is damaged by the driver, touch up with a sandpaper.

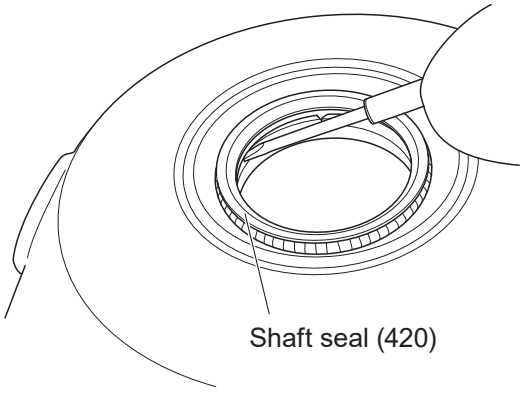

Bearing housing reassembly

Take the following steps and put together the disassembled bearing housing.

NOTE

- See manufacturer's instruction manuals to press the ball bearings and shaft seal.
- Tighten bolts diagonally and evenly by the rated torque.

1 Use a hand press to fit the ball bearings into the drive shaft (213).

The size of the front and rear ball bearing is different each other.

Pump side (321.1)	6308
Motor side (321.2)	6208

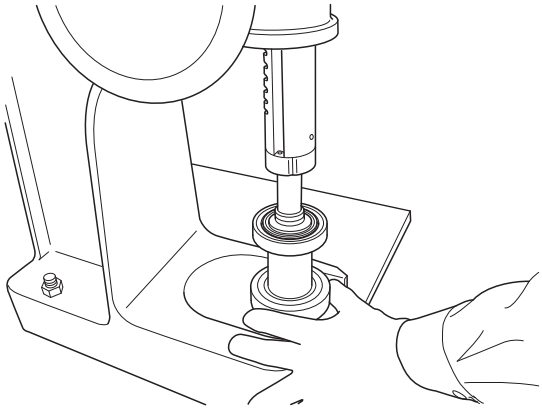

2 Apply grease to both the periphery and lip on the shaft seal.

3 Use a hand press and a plastic round bar to fit the shaft seal into the bearing housing end.

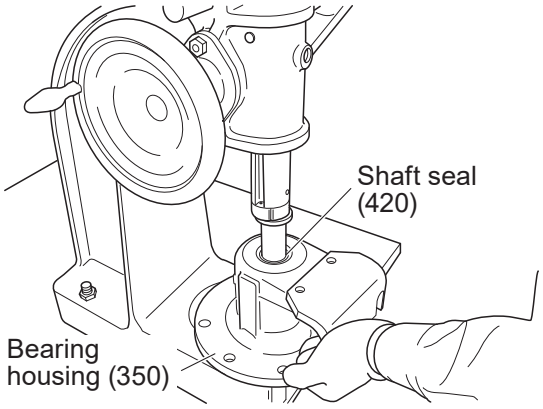

4 Fit a new wave washer (551) onto the bottom of the bearing housing.

Replace an old wave washer with the new one every time the bearing housing is take apart.

5 Clean and grease the ball bearing groove in the bearing housing.

6 Insert the drive shaft with the ball bearings into the bearing housing by hand.

7 Mount the bearing cover (360) to the bearing housing.

Tighten the hex. socket head cap screws (903.2) diagonally and evenly by 5.5N•m.

8 Set the front key (940.1) to the drive shaft and mount drive magnet unit (858).

Be careful not to bring any impacts on the drive magnet unit.

9 Tighten two hex. socket set screws (908.1) to fix the drive magnet unit by 12 N•m.

10 Align the bracket to the bearing housing.

Strong magnetic force is attracting the bracket. Be careful not to hit the bracket against the drive magnet.

NOTE

Be careful not to catch the finger or hand in between the bracket and bearing housing.

11 Tighten the hex. head bolts (901.6) to fix the bracket and the bearing housing.

12 Mount the front coupling hub and the key (940.2) to the drive shaft.

13 Tighten the hex. socket set screws (908.2).

Pump reassembly

Take the following steps and put together the disassembled pump.

NOTE

- Do not reuse gaskets. Always replace them with new ones, or sealing performance reduces. Clean sealing areas and fit gaskets in place.
- A good seal from the new gasket (400.1) is established in between the front casing (100.1) and the rear casing (158) when the hex head bolts (901.4) are tightened at the rated torque; however, the gasket and the plastic casings start creeping if they are pressed over time. To keep the good seal, wait 4 hours after the hex head bolts (901.4) are tightened first so the plastic parts will creep enough, and then tighten the hex head bolts by the rated torque again.
- Tighten bolts diagonally and evenly by the rated torque before initial operation and at regular intervals.
- The magnetic force of the pump is powerful. Take care not to catch the finger in the bracket. Do not allow iron pieces/powder to adhere to the magnet capsule unit.

1 For the pump with the drain port, attach the drain gasket (400.2) and the drain plate (122.1) to the front casing unit, and then fasten the hex head bolts (901.1).

Tighten the bolts diagonally and evenly by 8N•m.

2 Fit the new gasket onto the front casing (100.1).

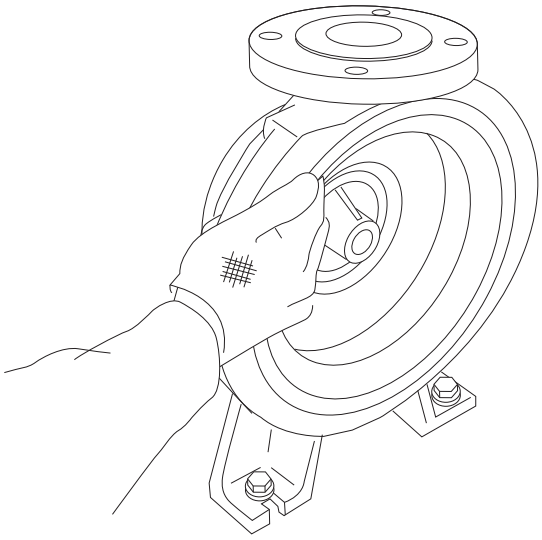

3 Place the magnet capsule unit (plus the impeller) onto the spindle in the rear casing.

Slowly rotate and fit the rear casing to the front casing.

4 Mount the rear casing cover on the rear casing and place the rear casing support.

Secure rear casing support by tightening hex bolts (901.4) diagonally and evenly by 85N•m.

5 Clean the drive magnet (858) if iron objects stick to the surface.

6 Use the attached back pull-out bolts threaded about half-way through the bracket (330) to ease two assemblies together.

7 Use an overhead crane or any other proper transporting machine to catch/hold the bearing housing and bracket horizontally and shift them to the pump.

- Make sure the drive magnet (858) does not hit the rear casing (158).
- Always keep the bearing housing and bracket level.

8 Once the back pull-out bolts come in contact with the rear casing support of the pump, start loosening the bolts gradually and alternately until the bracket "lands" on the pump.

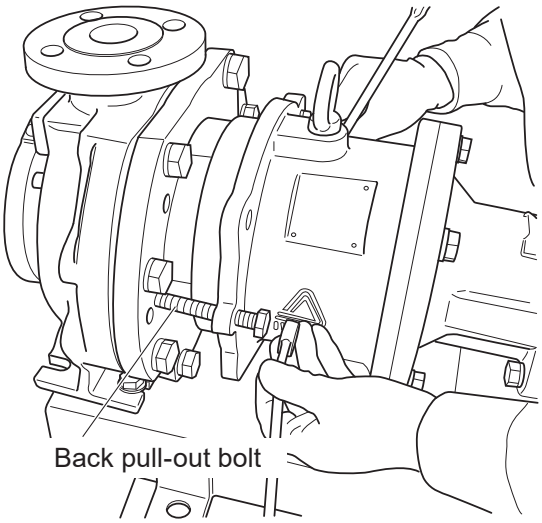

9 Tighten the bracket-rear casing support fixing bolts (901.5).

NOTE

Magnetic force of the pump is powerful. When taking apart or putting together the pump, take measures not to catch the finger in the metal parts.

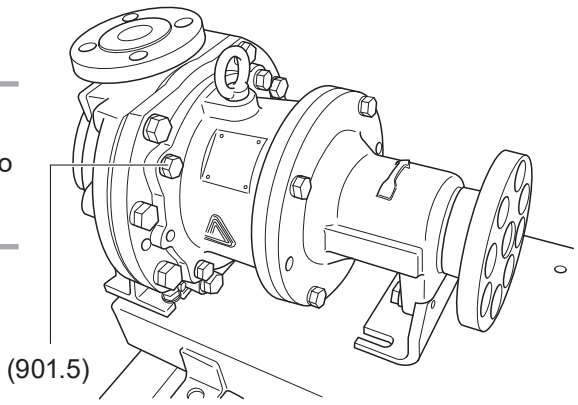

10 Assemble the mechanical coupling spacer to the hubs.

Ensure the centring of the coupling to prevent misalignment. The centring accuracy depends on the allowable range of each coupling in use.

11 Mount the coupling cover.

Specifications/Outer dimensions

Specifications

Information in this section is subject to change without notice.

■ Pump

50Hz/60Hz

		MDM50-32-160	MDM50-32-200	MDM65-40-160	MDM80-50-160
Inlet I.D. (mm)		50		65	80
Outlet I.D. (mm)		40		50	65
Top lift (m)	**2P**	36.2/39.7	70.4/103.0	36.0/49.4	42.9/62.6
	4P	10.0/12.8	16.1/23.6	8.6/13.0	11.1/16.8
Max flow (L/min)	**2P**	500	600	1000	1400
	4P	350	400	450	700
Min flow (L/min)	**2P**	50			
	4P	20			
Motor output (kW)	**2P**	3.7-7.5	5.5-15 (18.5kw also available only for 60Hz)	3.7-7.5	5.5-15 (18.5kw also available only for 60Hz)
	4P	1.5-3.7	1.5-5.5	1.5-3.7	1.5-5.5
Noise level (dB)		85	95	85	95
Liquid temp (°C)		See page 12.			
Max pressure (MPa)		1.6			
Max viscosity (mPa·s)		Contact us.			
Slurry capability		Pumps with SiC bearing and SiC spindle can handle the slurry with limitations of: - Max concentration of 5% - Max particle size of 50μm - Max hardness of 80Hs Contact us for more information.			
Ambient		0-40°C (32-104°F), 35-85%RH			
Wet ends	**Front casing (100.1)**	PFA/CFRETFE			
	Impeller (230)	PFA/CFRETFE			
	Rear casing (158)	PFA/CFRETFE			
	Magnet capsule (859)	PFA/CFRETFE			
	Bearing (310)	SiC/High density carbon			
	Spindle (210)	SiC/ Highly purity alumina ceramics			
	Liner ring (314.1)	SiC/ Highly purity alumina ceramics			
	Mouth ring (314.2)	SiC/Filled PTFE			
	Rear thrust ring (314.3)	PTFE/Filled PTFE			
	Gasket (400.1)	PTFE			

Outer dimensions

■ Pumps without a baseplate, coupling and motor

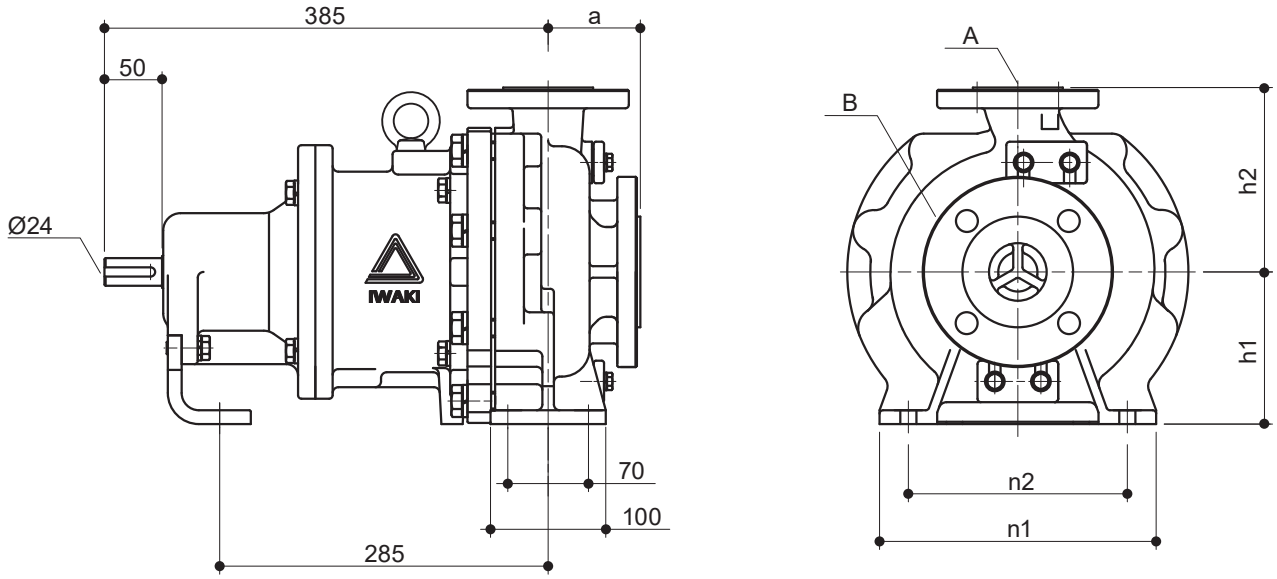

Pump model	a	h1	h2	n1	n2	A	B	Weight w/o motor kg
MDM50-32-160	80	132	160	240	192	32	50	70
MDM50-32-200		160	180					80
MDM65-40-160		132	160			40	65	70
MDM80-50-160	100	160	180	265	212	50	80	80

*The pump unit is shipped without a motor. Contact your motor manufacturer for the info about motor length/weight.
*Outer dimensions are subject to change. Contact us for the up-to-date revision.

EC DECLARATION OF CONFORMITY

A copy of the original Declaration of Conformity

(SUPPLIER'S NAME)

WE

IWAKI CO.,LTD.

(ADDRESS)

6-6 2-CHOME KANDA-SUDACHO CHIYODA-KU TOKYO JAPAN

(PRODUCT)

DECLARE UNDER OUR SOLE RESPONSIBILITY THAT THE PRODUCTS

MAGNETIC DRIVE PUMP

(MODEL NAME)

MDM SERIES

TO WHICH THIS DECLARATION RELATES ARE IN CONFORMITY

WITH THE FOLLOWING STANDARDS OR DIRECTIVES AS FAR AS APPLICABLE

(DIRECTIVES)

MACHINERY DIRECTIVE 2006/42/EC (ANNEX IIA)
RoHS DIRECTIVE 2011/65/EU

(STANDARDS)

EN ISO12100: 2010 EN809: 1998 + A1: 2009 EN IEC63000: 2018

(A PERSON WHO IS AUTHORISED TO COMPILE THE TECHNICAL FILE
IN THE COMMUNITY)

IWAKI EUROPE GMBH
SIEMENSRING 115 D-47877 WILLICH GERMANY

NOTE: THIS DECLARATION BECOMES INVALID IF TECHNICAL OR OPERATIONAL MODIFICATIONS ARE INTRODUCED WITHOUT THE MANUFACTURER'S CONSENT.

T. Sawada.

TSUTOMU SAWADA

DEPUTY SENIOR GENERAL MANAGER,

QUALITY ASSURANCE HEAD OFFICE

Tokyo, Sep. 2, 2021

(PLACE AND DATE OF ISSUE) **(NAME AND SIGNATURE OR EQUIVALENT MARKING OF AUTHORIZED PERSON)**

DOCUMENT NO. IS-51K-493-6

UK DECLARATION OF CONFORMITY

A copy of the original Declaration of Conformity

(SUPPLIER'S NAME)

WE

IWAKI CO.,LTD.

(ADDRESS)

6-6 2-CHOME KANDA-SUDACHO CHIYODA-KU TOKYO JAPAN

(PRODUCT)

DECLARE UNDER OUR SOLE RESPONSIBILITY THAT THE PRODUCTS

MAGNETIC DRIVE PUMP

(MODEL NAME)

MDM SERIES

TO WHICH THIS DECLARATION RELATES ARE IN CONFORMITY WITH THE FOLLOWING REGULATIONS OR STANDARDS AS FAR AS APPLICABLE

(REGULATIONS)

S.I. 2008/1597 SUPPLY OF MACHINERY (SAFETY)
S.I. 2012/3032 RESTRICTION OF HAZARDOUS SUBSTANCES

(STANDARDS)

EN ISO12100: 2010 EN809: 1998 + A1: 2009 EN IEC63000: 2018

(A PERSON WHO IS AUTHORISED TO COMPILE THE TECHNICAL FILE IN THE GB MARKET)

SENSYS LIMITED
UNIT 9 POND CLOSE WALKERN ROAD
STEVENAGE HERTS SG1 3QP UK

NOTE: THIS DECLARATION BECOMES INVALID IF TECHNICAL OR OPERATIONAL MODIFICATIONS ARE INTRODUCED WITHOUT THE MANUFACTURER'S CONSENT.

T. Sawada.

TSUTOMU SAWADA

SENIOR GENERAL MANAGER,

QUALITY ASSURANCE HEAD OFFICE

Tokyo, Jun. 6, 2023

(PLACE AND DATE OF ISSUE) **(NAME AND SIGNATURE OR EQUIVALENT MARKING OF AUTHORIZED PERSON)**

DOCUMENT NO. IS-51K-591-1

CE/UKCA conformity

■ Information on CE/UKCA conformity of pump units when the motor is fitted by the customer (dealer/operator)

We hereby confirm the CE/UKCA conformity of our pump unit provided that the following criteria about intended use are satisfied as described in this instruction manual:

- Motor conformity in accordance with any relevant EC directives/UKCA regulations which are currently effective.
- The dimensions of a required motor flange and shaft must fit the specified pump.
- The motor must be installed to the pump according to this instruction manual.
- Guaranteed grounding
- The pump must not be repainted over our original upper coating.

Any reseller or dealer who connects the pump with a motor and markets it as a complete unit must conform to all relevant EC directives/UKCA regulations. In such cases, the re-seller or dealer then becomes the manufacturer.

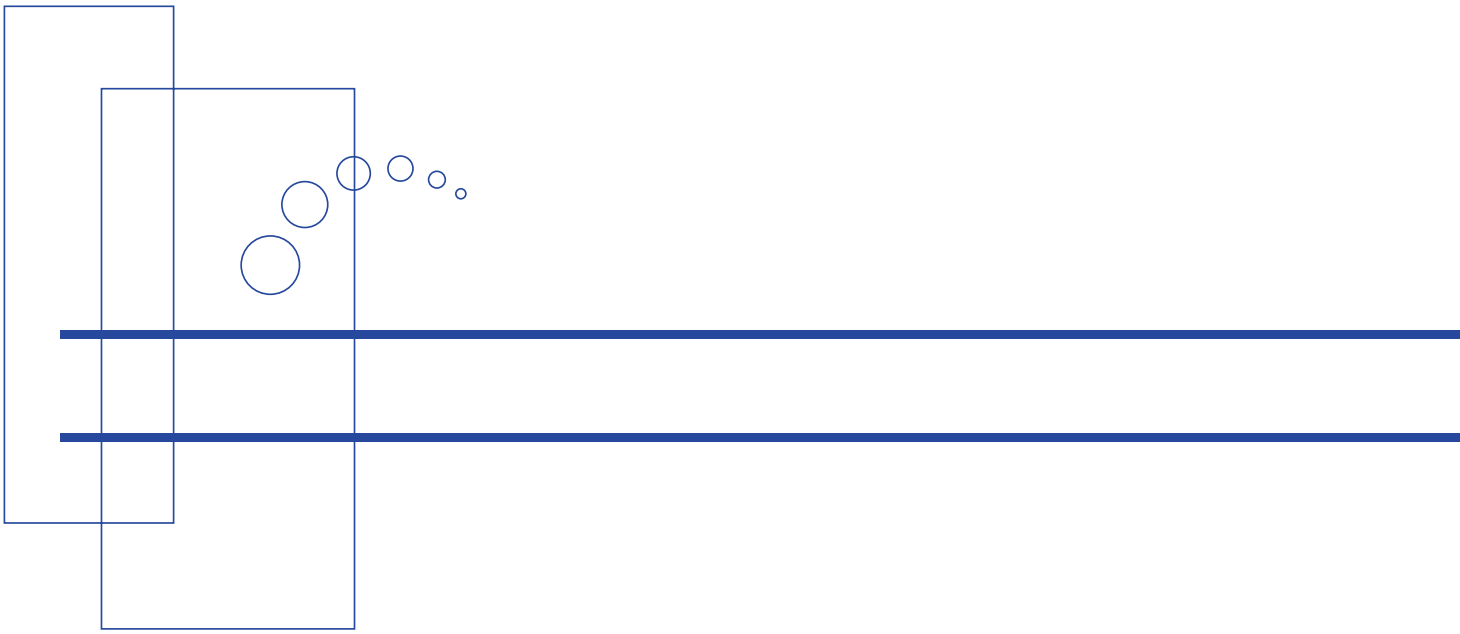

https://www.iwakipumps.jp

IWAKI CO.,LTD. 6-6 Kanda-Sudacho 2-chome Chiyoda-ku Tokyo 101-8558 Japan
TEL: +81 3 3254 2935 FAX: +81 3 3252 8892

European Headquarter / IWAKI Europe GmbH
TEL: +49 2154 9254 0 FAX: +49 2154 9254 48
Germany / IWAKI Europe GmbH
TEL: +49 2154 9254 50 FAX: +49 2154 9254 55
The Netherlands / IWAKI Europe GmbH (Netherlands Branch)
TEL: +31 74 2420011 FAX: +49 2154 9254 48
Italy / IWAKI Europe GmbH (Italy Branch)
TEL: +39 0445 561219 FAX: +39 0445 569088
Spain / IWAKI Europe GmbH (Spain Branch)
TEL/FAX: +34 934 741 638
Poland / IWAKI Europe GmbH (East Europe Branch)
TEL: +48 12 347 0755 FAX: +48 12 347 0900
Denmark / IWAKI Nordic A/S
TEL: +45 48 242345
Finland / IWAKI Suomi Oy
TEL: +358 10 201 0490
Norway / IWAKI Norge AS
TEL: +47 23 38 49 00

Sweden / IWAKI Sverige AB
TEL: +46 8 511 72900
Belgium / IWAKI Belgium N.V.
TEL: +32 13 670200 FAX: +32 13 672030
France / IWAKI France S.A.
TEL: +33 1 69 63 33 70 FAX: +33 1 64 49 92 73
U.S.A. / IWAKI America Inc.
TEL: +1 508 429 1440 FAX: +1 508 429 1386
Brazil / IWAKI Do Brasil Comercio De Bombas Hidraulicas LTDA.
TEL/FAX: +55 19 3244 5900
China (Shanghai) / IWAKI Pumps (Shanghai) Co., Ltd.
TEL: +86 21 6272 7502 FAX: +86 21 6272 6929
China (Hong Kong) / IWAKI Pumps Co., Ltd.
TEL: +852 2607 1168 FAX: +852 2607 1000
China (Guangzhou) / GFTZ IWAKI Engineering & Trading Co., Ltd.
TEL: +86 20 84350603 FAX: +86 20 84359181
China (Shenzhen) / IWAKI Pumps (Shenzhen) Co., Ltd.
TEL: +86 0755 8656 3696

Singapore / IWAKI Singapore Pte Ltd.
TEL: +65 6316 2028 FAX: +65 6316 3221
Indonesia / IWAKI Singapore Pte Ltd. (Indonesia Office)
TEL: +62 21 6906606 FAX: +62 21 6906612
Malaysia / IWAKIm SDN. BHD.
TEL: +60 3 7803 8807 FAX: +60 3 7803 4800
Korea / IWAKI Korea Co., Ltd.
TEL: +82 2 6238 4800 FAX: +82 2 6238 4801
Taiwan / IWAKI Pumps Taiwan Co., Ltd.
TEL: +886 2 8227 6900 FAX: +886 2 8227 6818
Thailand / IWAKI (Thailand) Co., Ltd.
TEL: +66 2 322 2471 FAX: +66 2 322 2477
Australia / IWAKI Pumps Australia Pty Ltd.
TEL: +61 2 9899 2411 FAX: +61 2 9899 2421

T579-13 '26/09