IWAKI PUMPS

Additional Instructions for the ATEX-Certified models of:

MDE/MDM/MDM-C/MDW/MXM



The Heart of Industry
IWAKI

Contents

1. Overview 3
1.1 Symbols 3
1.1.1 Cautionary Symbols 3
1.1.2 Graphic Symbols 3
1.2 ATEX Certified Pumps 3

2. Introduction to ATEX 3
2.1 ATEX Rating 3

3. ATEX Safety Instructions 4
3.1 Precautions for ATEX Use 4
3.2 User's Observations 4
3.3 Notes for Electrostatic Discharge 5
3.4 Notes for Chemical Liquids 5

4. ATEX Mounting 6
4.1 Installation/Plumbing 6
4.1.1 Operating Conditions 6
4.1.2 Installation Conditions 6
4.2 Liquid Temperature 7

5. ATEX Operation 8
5.1 Before Operation 8
5.2 Operation 8

6. ATEX Maintenance 9
6.1 Overhaul 9

7. Declaration of conformity 10

⚠ Please read through this instruction manual before use.

This instruction manual describes important precautions and instructions
for the product. Always keep it on hand for quick reference.

⚠ Export Restrictions

Technical information contained in this instruction manual might be treated as controlled technology in your countries, due to agreements in international regime for export control.
Please be reminded that export license/permission could be required when this manual is provided, due to export control regulations of your country.

1. Overview

These additional instructions describe the particular requirements and measures for installation/operation of our ATEX certified pumps in potentially-explosive environments.
Use this instructions in addition to the standard instruction manual of the pump and any other document which may be related to use in ATEX (atmosphere explosive).

1.1 Symbols

1.1.1 Cautionary Symbols

⚠WARNING:
Indicates mishandling could lead to a fatal or serious injury accident.

⚠CAUTION:
Indicates mishandling could lead to personal injury or property damage.

1.1.2 Graphic Symbols

indicates an explosive protection and other related information related to use in potentially-explosive environments.

indicates a potentially-hazardous consequences that results from ignoring the warning or caution message.

indicates effective measures must be taken.

indicates specific measures or actions must NOT be taken.

1.2 ATEX Certified Pumps

The following magnetic drive centrifugal pumps that are equipped with, or intended to be equipped with, an explosion-proof motor may fall under the ATEX-certified pump:

- Iwaki MDE series
- Iwaki MDM series
- Iwaki MDM-C series
- Iwaki MDW series
- Iwaki MXM series

*Do not use these pumps as a self-priming pump.

2. Introduction to ATEX

In accordance with Directive 2014/34/EU, an Iwaki ATEX-certified pump (non-electrical equipment according to the ATEX 2014/34/EU GUIDELINES, §42) can be used with the electric motor that is also approved for use in potentially-explosive atmospheres by its manufacturer.
The ATEX pump unit (combination of the ATEX pump and motor) must clearly express their intrinsic protection level for use in ATEX (ATEX rating). If the pump and motor have different ATEX ratings, obey the device with the lower rating.
Also, our single ATEX pump may be shipped without motor to a user in the European Union. In such a case, it is the user's responsibility for providing the ATEX motor to the pump for use in ATEX.

2.1 ATEX Rating

Ⓔx II 2G Ex h IIC T_ Gb X
a b c d e f g

a	Equipment group	I: Underground II: Above ground
b	Equipment category*1	
	Protection level	1: Very high 2: High 3: Enhanced
	Explosive gas	D: Combustible dust substances G: Flammable gas/vapour
c	Constructional safety	Ex h: Safety device in accordance with the section 10.2 of the EN ISO 80079-37:2016.
d	Gas group	IIA: a typical gas is propane IIB: a typical gas is ethylene IIC: a typical gas is hydrogen
e	Temperature class*2 (max allowable surface temp.)	T6: 85°C or below T5: 100°C or below T4: 135°C or below T3: 200°C or below T2: 300°C or below T1: 450°C or below
f	Equipment protection level (EPL)*1	Gc: A single system to avoid ignition sources during normal operation Gb: An independent or fail-safe system to avoid ignition sources during normal operation and expected malfunctions Ga: An independent or fail-safe system to avoid ignition sources during normal operation, expected malfunctions and rare malfunctions
g	Specific conditions of use	X: Specific condition of use in accordance with the section 11.2 of the EN ISO 80079-36:2016

*1 The inside of the pump is not evaluated by the ATEX rating.
*2 The pump is classified as T6, T5, T4, or T3 temperature class depending on the maximum allowable liquid temperature at each pump model.

3. ATEX Safety Instructions

3.1 Precautions for ATEX Use

To ensure that our ATEX compliant pumps deliver chemical liquids without risk of explosion and the foreseeable ignition source is prevented in a certain level of ATEX, there are some limitations put on wet ends used in pumps and chemicals to be delivered. See the section 3.3 and.3.4 for detail.

Observe the rated specification of each pump. See the table on page 9 and choose the standard manual of your pump.

Our ATEX pumps can not be used in an environment where a chemical liquid to be transferred can create an explosive atmosphere under normal operating conditions.

Observe the EC directive 2014/34/EU and related standards and rules described on the ATEX Declaration of Conformity.

Do not run the ATEX pump without regular maintenance. See the standard manual of your pump for the authorized maintenance process and intervals.

3.2 User's Observations

WARNING:
Users must observe the following precautions at their own risks.

<Directive and harmonized standards>

– According to Directive 2014/34/EU, use the ATEX pump in accordance with the ATEX rating in potentially-explosive environments.
– According to Directive 1999/92/EC, ANNEX I, classify places where explosive atmospheres may occur into the appropriate zone.
– According to Directive 1999/92/EC, ANNEX II, satisfy the minimum requirements for the safety and health protection of operators in potentially-explosive environments.

<ATEX pump>

– Make sure that the ATEX pump is not used beyond the limitations of the pump performance (max pressure, flow rate, etc).
– Make sure that:
  • the pump is grounded properly.
  • the pump is not mounted with the self-priming tank and is not used as a self-priming pump.
  • the coupling does not come in contact with the coupling cover in operation.
  • the pump, plumbing, and any possible flow path in the system must be filled with the liquid to be delivered at any time.
  • the temperature class (max permissible surface temperature of the pump) is observed. See the 2.1 ATEX Rating table.
  • the pump inlet and outlet must be properly connected to your plumbing system.
  • the pump condition is kept suitable for use in an explosive atmosphere through regular inspection and maintenance.
  • any measure must be taken to prevent dry running of the pump (monitoring of the tank level and the flow rate).
– Do not allow dust to build up onto the pump. Use a wet or damp cloth to remove dust from the pump. Do not use dry cloth which can build up static electricity and also be an ignition source in an explosive atmosphere.
– The pump should be handled, operated, and managed by authorized/experienced personnel with a full understanding of the ATEX certified pump/devices and their related standards and regulations.
– After the ATEX pump or device received an authorized repair or overhaul, commissioning must be executed by authorized/experienced personnel so it will run safe in a potentially-explosive environment.

<ATEX pump unit>

ATEX pump unit means the ATEX pump and the motor.

– Every time any engineering change takes place to the pump unit (e.g. different seal materials/grade):
  • the manufacturer must make a reassessment of risk of explosion according to Directive 2014/34/EU and Directive 1999/92/EC, Article 4 Assessment of explosion risks.
  • the manufacturer must add any engineering change to the explosion protection document that has been drawn up according to Directive 1999/92/EC, Article 8, or complete conformity assessment and issue an EU declaration of conformity according to Directive 2014/34/EU.

<ATEX devices>

– Use ATEX certified devices of the motor, coupling, and sensors accordingly to the ATEX rating of the pump.

– Observe the installation/operating instructions, specification sheet and proper use of each ATEX device (motor, coupling, and sensor, etc). Use of each device with the ATEX pump must NOT be a new sources of ignition.

<Plumbing>

– Make sure plumbing is established properly without risk of a chemical leak. Tighten plumbing bolts at regular intervals.

– Operating conditions including a surrounding atmosphere, fluid velocity in plumbing, or so must be well controlled by users.

<Others>

– Perform daily inspection (tank liquid level, pressure, noise, etc.). Take apart the pump for inspection (a friction mark on a moving part, bearing I.D., spindle O.D., mouth ring thickness, etc.) at regular intervals. See standard manuals for the interval of each pump model (6 months for MDM).

– Visit our webpage and use the latest version manual.

3.3 Notes for Electrostatic Discharge

⚠WARNING:
Users must observe the following precautions at their own risks.

Our ATEX certified pumps have the internal plastic wet ends and an external metal cover that is electrically-grounded over the grounding point (see the section 4.1.2).

– According to EN ISO 80079-36:2016, only liquids with a high conductivity (> 1000pS/m) can be used.

NOTE

There exist highly conductive but highly chargeable conductive liquids including organic acetates, ethers and higher ketones (IEC/TS 60079-32-1). Such liquids can not be used with our pumps.

– If the ATEX pump is used in the gas group of IIC, the total thickness of lower and upper coatings must be 200 µm or below so the static electricity won't be charged to the meal part of the pump.

– When plumbing is lined with plastics, observe the maximum allowable fluid velocity so it won't be electrostatically-charged. Contact the plumbing supplier for detail.

3.4 Notes for Chemical Liquids

⚠WARNING:
Users must observe the following precautions at their own risks.

– It's not the manufacturer's responsibility for any chemical corrosion to wet ends. Make sure that the liquid does not chemically attack or penetrate wet ends of the pump in advance.

– It's not the manufacturer's responsibility for any personal injury or property damage that could happen when the pump is used out of it's specifications. Particularly, when the pump is used with a liquid temperature or a liquid pressure that exceeds or falls below pump's limits, wet ends could deteriorate or deform and eventually the pump fails.

– Use the optimal plumbing, valves, and gaskets according to the chemical liquid to be used. Contact each manufacturer for detail.

– The life of pump changes depending on operating conditions (if it's harsh, corrosive, or so). See manuals and make daily and periodic inspections so the pump will be kept in a good condition.

– Before taking apart the pump for maintenance or repair, flush out chemicals thoroughly and clean the inside of the pump until nothing remains.

4. ATEX Mounting

4.1 Installation/Plumbing

Special cares are needed to install the ATEX certified pumps in a potentially-explosive atmosphere accordingly.

4.1.1 Operating Conditions

⚠WARNING:
Users must observe the following precautions at their own risks.

– Do not install the pump where ambient temperature can exceed 0-40°C (32-104°F).
– Operating conditions including an explosive atmosphere and fluid velocity in plumbing must be well managed by users.
– Install the ATEX certified pump in accordance with the ATEX rating.
– Observe the rated rpm of each motor so the pump won't vibrate significantly.

4.1.2 Installation Conditions

⚠WARNING:
Users must observe the following precautions at their own risks.

NOTE
See the standard manual of each pump model for general precautions for installation.

– Ground the pump over the following grounding point at each pump model so conducting metal parts won't be charged differently and dangerously, and any electrically-isolated parts won't be an ignition source in an explosive environment.

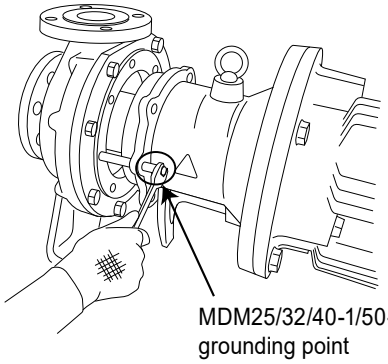

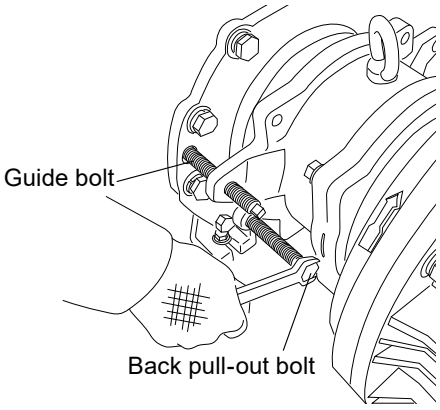

For the MDM40-2/50-2, utilize the back pull-out hole to establish the grounding point.

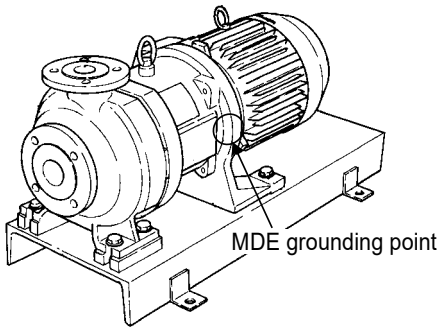

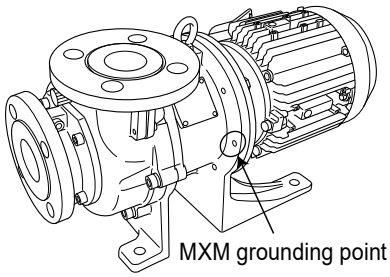

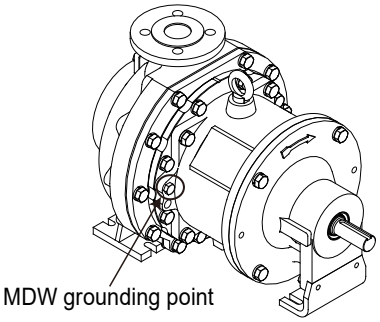

NOTE
Note the above grounding method is provided to remove the static electricity from conductive metal parts of the pump but NOT from electrically-charged liquid.

– Allow sufficient space (1m or more) around the pump for good cooling effect, easy access and maintenance.
– If necessary, guard a conducting metal part of the pump against any other object so they will not hit each other to generate a source of dangerous ignition. A safeguard for a metal part must be grounded properly.
– Only use an ATEX compliant motor (ATEX compliant inverter accordingly).
– Only use an ATEX compliant coupling and coupling cover that are made of a conducting metal part.
– Ensure protection and containment of solution in the event of plumbing or pump damage (secondary containment). A leaking chemical can be another risk of explosion. Dispose of any chemicals in accordance with local rules and regulations. If necessary, consult a licensed industrial waste disposal company.
– Stop the pump immediately in a case where a chemical leak is detected in a potentially-explosive atmosphere.
– Use a filter or a strainer so the pump will not take in scales or debris. Use an proper mesh size for the prevention of clogging in ATEX.

NOTE

Observe manuals of each device for installation or use of them.

– Select a level location free from vibration. Anchor the pump with bolts or a baseplate (if provided), so it doesn't vibrate.
– Use measures to keep the pump connections free from stress. Mechanical vibration of the piping can stress connection points.
– Before plumbing, remove the protective cap from the pump inlet and outlet in a non-explosive atmosphere (MDM40-2I/50-2I).

4.2 Liquid Temperature

⚠WARNING:
Users must observe the following precautions at their own risks.

The temperature class of the pump is determined by the maximum allowable liquid temperature at each pump model as shown below.

*The maximum allowable liquid temperatures are based on the ambient temperature of 0-40°C and the ambient humidity of 35-85%RH.

Temperature class	Max allowable liquid temperature							
Pump models	MDW		MDE	MDM			MDM-C	MXM
Wet end materials	ETFE	PFA	PFA/ETFE	ETFE	PFA	PFA	PFA	ETFE
Wet end code	EK	PK	All	ECF/EKK	PKK	NKK	PKK	All
T6: 85°C	70°C	70°C	70°C	70°C	70°C	70°C	70°C	70°C
T5: 100°C	85°C	85°C	85°C	85°C	85°C*1	85°C	85°C*1	85°C
T4: 135°C	105°C	120°C	100°C	105°C	120°C*1	120°C	120°C*1	105°C*1
T3: 200°C	-	-	-	-	150°C*1	-	150°C*1	-

*1 Use a pump model with the high temperature compatible type to meet the marked liquid temperature and thus the corresponding high temperature classes.

– Do not use the ATEX pump with liquid that:
  • can create a potentially-explosive environment when such liquid is delivered in normal operating conditions (at an atmospheric pressure or any permissible process pressure).
  • contains solid particles which can deposit or precipitate.
  • chemically unstable.
  • generates the heat of chemical reaction even after oxygen is removed from the atmosphere.

NOTE

See the standard manual of each pump for general precautions for handling liquid.

5. ATEX Operation

5.1 Before Operation

⚠WARNING:
Users must observe the following precautions at their own risks.

– Check whether pump and motor are suitable for use in the selected area.
– Make sure the pump and plumbing are filled (primed) with the liquid to be pumped.
– Check for a leak.

5.2 Operation

⚠WARNING:
Users must observe the following precautions at their own risks.

NOTE
See the standard manual of each pump model for general precautions for operation.

– Commissioning is required for expelling entrained air from the pump, especially for the MDE and MDW design that have a split plate internally.
– Always monitor the discharge pressure, amps, flow rate to know the pump runs good in operation, especially for the beginning of operation.
– Do not run pump dry. Even the MDM or the MXM with CF bearing/spindle material code (the combination of a high density carbon bearing and a high purity ceramic spindle) can not run dry in a potentially-explosive atmosphere either.
– Decoupling of the drive and driven magnets brings about eddy current, Joule heat as the eddy current is lost, and eventually the high surface temperature of the drive magnet which could be another risk of explosion. Stop the pump immediately and leave it for more than one hour to cool it down. The magnets will be coupled again as the pump is turned ON (or they may not be coupled if they have been demagnetized considerably by the heat.).
– Once a chemical leak has been detected in an explosive atmosphere, and the emergency stop mechanism has been triggered and stopped the system, the system must be fully reviewed, corrected for ensuring safety, and then resumed by an authorized personnel.
– Contact us or your distributor if you have any questions on our pump and its operation.
– Observe the maximum discharge pressure of each pump model.

Pump	MPa
MDE65/80	1.6
MDM25-3	
MDM32-2	
MDM40-2	
MDM50-2	
MDW	
MDE125	1.0
MDM	
MXM	0.7

6. ATEX Maintenance

See the standard manual of the pump to perform the daily and periodic maintenance.

6.1 Overhaul

⚠WARNING:

Users must observe the following precautions at their own risks.

– Only use tools that have been approved for use in an explosive atmosphere.

– Only use protective wears that have been approved for use in an explosive atmosphere.

– Take suitable measures to ensure that no electrostatic discharges can build up in potentially-explosive environments.

– See the standard manual of the pump to perform the daily and periodic maintenance.

– Take apart the pump for inspection and maintenance at regular intervals. Short intervals will be needed in a harsh operating condition.

– Allow the pump to cool down completely before any maintenance and repair work.

– Before taking apart the pump for maintenance or repair, flush out chemicals thoroughly and clean the inside of the pump until nothing remains.

– Before taking apart the pump, always fill the spatial area of the closed tank and plumbing with inert gas such as nitrogen so static electricity and the risk of explosion are removed. Then empty and flush the pump and plumbing.

– Tighten the back pull-out bolts evenly and in turn until they bottom out and the motor is fully pulled back (MDE/MDM/MDM-C/MDW).

– When the motor is removed from the pump, check for dust accumulation in the motor bracket.

– As necessary, clean the pump surface gently with a damp or anti-static cloth only. Static electricity can build up on parts if rub strong or wipe with dry cloth.

– There is a strong magnetic force between the drive magnet and the driven magnet, and the both magnets are always pulled together or attracting a metal part. If they have got a strong impact due to their own magnetic force, it can be a source of ignition especially in a potentially-explosive atmosphere.

– If the set screws that hold the drive magnet to the motor shaft comes loose, the drive magnet can come in contact with the rear casing. It can be a source of ignition in an explosive atmosphere. Consult the standard manual of your pump and tighten the set screws by the rated torque.

– Observe the maximum motor weight at each pump (close-coupled design).

Pump	Max weight	Remarks
MDE	740kg	
MDM	390kg	No limit on long-coupled design
MDM-C	-	No close coupled design
MDW	-	No close coupled design
MXM	-	No back pull out design

– Observe the maximum operating hours of the ball bearing (long-coupled design).

Pump	Remarks
MDM-C	15,000hr at 122°F (50°C) or below *7,500hr at 122-158°F (50-70°C)
MDW	15,000hr at 122°F (50°C) or below *7,500hr at 122-158°F (50-70°C)

*7500hr or shorter in a harsh operating condition.

– Check the pump shaft and the motor shaft are centred correctly so that abnormal oscillation won't result. Observe the maximum centring deviation (long-coupled design).

Pump	Max angle	Max non-linearity
MDM-C	0.5°	0.05mm
MDW	0.5°	0.05mm

– Observe the instruction manual at each pump model.

Pump	Instruction #
MDE	T312
MDM	T629
MDM-C	T579
MDW	T693
MXM	T591

Declaration of Conformity

According to Directive 2014/34/EU

Iwaki Co., LTD
6-6 2-Chome Kanda-Sudacho Chiyoda-Ku Tokyo JAPAN

Declare under our sole responsibility that the products:

MDE	Ⓔx II -/2G Ex h IIC T6...T4 -/Gb X
MDM	Ⓔx II -/2G Ex h IIC T6...T3 -/Gb X
MDM-C	Ⓔx II -/2G Ex h IIC T6...T4 -/Gb X
MDW	Ⓔx II -/2G Ex h IIC T6...T4 -/Gb X
MXM	Ⓔx II -/2G Ex h IIC T6...T4 -/Gb X

are rated as above, and are in conformity with:

Directive 2014/34/EU

and the following harmonized standards:

EN ISO 80079-36: 2016
EN ISO 80079-37: 2016

as far as applicable.

All the technical documents required by the directive and harmonized standards are located in:

NB0102 Physikalisch-Technische Bundesanstalt (PTB)

K. Nishikubo

Tokyo, 10, Mach, 2021

KAZUNARI NISHIKUBO
SENIOR GENERAL MANAGER,
QUALITY ASSURANCE HEAD OFFICE

DOCUMENT NO.: IS-51K-571-1

NOTE: This is a copy of the original Declaration of Conformity.

https://www.iwakipumps.jp
IWAKI CO.,LTD. 6-6 Kanda-Sudacho 2-chome Chiyoda-ku Tokyo 101-8558 Japan
TEL: +81 3 3254 2935 FAX: +81 3 3252 8892

European Headquarter / IWAKI Europe GmbH
TEL: +49 2154 9254 0 FAX: +49 2154 9254 48
Germany / IWAKI Europe GmbH
TEL: +49 2154 9254 50 FAX: +49 2154 9254 55
The Netherlands / IWAKI Europe GmbH (Netherlands Branch)
TEL: +31 74 2420011 FAX: +49 2154 9254 48
Italy / IWAKI Europe GmbH (Italy Branch)
TEL: +39 0445 561219 FAX: +39 0445 569088
Spain / IWAKI Europe GmbH (Spain Branch)
TEL/FAX: +34 934 741 638
Poland / IWAKI Europe GmbH (East Europe Branch)
TEL: +48 12 347 0755 FAX: +48 12 347 0900
Belgium / IWAKI Belgium N.V.
TEL: +32 13 670200 FAX: +32 13 672030
Denmark / IWAKI Nordic A/S
TEL: +45 48 242345
Finland / IWAKI Suomi Oy
TEL: +358 10 201 0490
France / IWAKI France S.A.
TEL: +33 1 69 63 33 70 FAX: +33 1 64 49 92 73
Norway / IWAKI Norge AS
TEL: +47 23 38 49 00
Sweden / IWAKI Sverige AB
TEL: +46 8 511 72900
U.S.A. / IWAKI America Inc.
TEL: +1 508 429 1440 FAX: +1 508 429 1386
Argentina / IWAKI America Inc. (Argentina Branch)
TEL: +54 911 6477 4116
Brazil / IWAKI Do Brasil Comercio De Bombas Hidraulicas LTDA.
TEL/FAX: +55 19 3244 5900
Singapore / IWAKI Singapore Pte Ltd.
TEL: +65 6316 2028 FAX: +65 6316 3221
Indonesia / IWAKI Singapore (Indonesia Office)
TEL: +62 21 6906606 FAX: +62 21 6906612
Malaysia / IWAKIm SDN. BHD.
TEL: +60 3 7803 8807 FAX: +60 3 7803 4800
Australia / IWAKI Pumps Australia Pty Ltd.
TEL: +61 2 9899 2411 FAX: +61 2 9899 2421
China (Hong Kong) / IWAKI Pumps Co., Ltd.
TEL: +852 2607 1168 FAX: +852 2607 1000
China (Guangzhou) / GFTZ IWAKI Engineering & Trading Co., Ltd.
TEL: +86 20 84350603 FAX: +86 20 84359181
China (Shanghai) / IWAKI Pumps (Shanghai) Co., Ltd.
TEL: +86 21 6272 7502 FAX: +86 21 6272 6929
Korea / IWAKI Korea Co., Ltd.
TEL: +82 2 2630 4800 FAX: +82 2 2630 4801
Taiwan / IWAKI Pumps Taiwan Co., Ltd.
TEL: +886 2 8227 6900 FAX: +886 2 8227 6818
Thailand / IWAKI (Thailand) Co., Ltd.
TEL: +66 2 322 2471 FAX: +66 2 322 2477

T1070-2 ‘23/04