IWAKI PUMPS

IWAKI
Magnetic Drive Gear Pump
MDG-R2 (built-in type)
Instruction Manual

⚠ Read this manual before use of product

Thank you for having selected the Iwaki Magnetic Gear Pump Model MDG-R2. This manual deals with the correct handling and operation procedures and troubleshooting methods for the pump. To make maximum use of the pump and to ensure safe, long operation, please read this manual carefully prior to operating the pump. Pay special attention to the "Warning" and "Caution" sections as they relate to matters of safety and proper usage of the pump. This instruction manual should be kept on hand by the end user for quick reference.

Contents

Chapter Page

1. Safety Instruction 1, 2
2. Inspection and Unpacking 3
3. Principle of Operation 3
4. Pump Identification Codes 4
5. External Dimensions 5
6. Standard Performance Curve 7
7. Descriptions of Parts 10
8. Name of Parts 11, 12
9. Handling Instructions 13, 14
10. Installation, Piping, and Wiring ..... 15 ~ 18
11. Operation 19, 20
12. Causes of Trouble and Troubleshooting 21
13. Maintenance and Inspection ..... 22 ~ 26

Important Instruction

For the Safe and Correct Handling of the Pump

- "Safety Instruction" section deals with important details about handling of the product. Before use, read this section carefully for the prevention of personal injury or property damage.
- Observe the instructions accompanied with "WARNING" or "CAUTION" in this manual. These instructions are very important for protecting pump users from dangerous situations.
- The symbols on this instruction manual have the following meanings:

WARNING	**Nonobservance or misapplication of the contents of "Warning" section could lead to a serious accident which may result in death.**
CAUTION	**Nonobservance or misapplication of the contents of "Caution" section could lead to personal injury or property damage.**

Types of Symbols

	Indicates a prohibited action or procedure. Inside or near this circle, a concrete and practical image of the activity to be avoided is depicted.
	Indicates an important action or procedure which must be performed or carried out without fail. Failure to follow the instructions herein can lead to malfunction or damage to the pump.
	Explosion Protection - This symbol identifies information about avoiding explosions in potentially explosive atmospheres in accordance with EC Directive 94/9/EC (ATEX).

Export Restrictions

Technical information contained in this instruction manual might be treated as controlled technology in your countries, due to agreements in international regime for export control.
Please be reminded that export license/permission could be required when this manual is provided, due to export control regulations of your country.

1. Safety Instruction

⚠ Warning

- **Turn off power supply.**
  Working without disconnecting the power supply may cause an electrical shock. Before engaging upon any working procedures involving the pump, make sure to turn the power supply switch off and to stop the pump and other related devices.

Electrical Shock

- **Terminate operation.**
  When you detect or become aware of a dangerous sign or abnormal condition during operation, terminate the operation immediately and start it from the beginning again.

- **For specified application only.**
  The use of a pump in an application other than those clearly specified may result in injury or damage to the pump. Use the pump strictly in accordance with the pump specifications and application range.

Prohibited

- **No remodeling.**
  Never remodel a pump. Otherwise, a serious accident may result. Iwaki will not be responsible for any accident or damage of any kind which is caused by the user remodeling the pump without first obtaining permission or instructions from Iwaki.

No Remodeling

- **Wear protectors.**
  If you touch or come in contact with any type of hazardous chemical liquid, including but not limited to chemicals, you may experience a serious injury. Wear protective gear (protective mask, gloves, etc.) during the pump operation.

Wear protective gear

⚠ Caution

- **Qualified operators only.**
  The pump operator and pump operation supervisor must not allow any operators who have little or no knowledge of the pump to run or operate the pump. Pump operators must have a sound knowledge of the pump and its operation.

Prohibited

- **Specified power only.**
  Do not operate the pump on voltage which is not specified on the nameplate. Failure to do so may result in damage or fire. Only the specified power level is to be applied.

Prohibited

- **Do not wet or dampen.**
  If the motor or wiring cable becomes wet or dampened with the operating liquid by mistake, this may result in a fire or cause an electrical shock. Install the motor and wiring cable in positions which are not likely to become wet or dampened with any liquid.

Prohibited

- **Ventilate.**
  Poisoning may result during an operation which involves toxic or odorous liquid. Ventilate the operating site sufficiently.

Caution

- **Spill-out accident.**
  Protective measures should be taken against any accidental spill-out or leakage of the operating liquid as a result of unexpected damage on the pump or the related piping.

Caution

⚠ Caution

- **Damaged pump.**
  Never operate a damaged pump. A damaged pump may cause leakage or electrical shock.

Prohibited

- **Operating site must be free of water and humidity.**
  The pump is not designed to be water-proof or dust-proof. The use of the pump in places where water splashes or humidity is high may result in an electrical shock or short circuit.

Prohibited

- **Do not damage or change power cable.**
  Do not scratch, damage, process, or pull the power cable forcibly. An extra load onto the cable, such as heating the cable or placing something heavy on the cable, may damage the cable and finally cause a fire or an electrical shock.

Caution

- **Do not cover the motor.**
  Running a covered motor may accumulate heat inside the motor and cause a fire or a mechanical failure. Ventilate the motor sufficiently.

- **Arrange grounding.**
  Do not operate the pump without connecting the grounding wire. Otherwise, an electrical shock may result. Make sure the grounding wire is connected with the grounding terminal. Ex

Grounding

⚠ Caution

- **Install an earth leakage breaker (option).**
  The operation of a pump without using an earth leakage breaker may cause an electrical shock. Please purchase an optional leakage breaker and install in the system.

Electrical Shock

- **Power cable cannot be replaced.**
  Never use a damaged or affected power cable. Otherwise, a fire or an electrical shock may result. Handle the power cable carefully, as it cannot to be replaced with a new cable. (The pump unit itself must be replaced in that circumstance.)

Caution

- **Limited operating site and storage.**
  Do not install or store the pump in the following places:
  * Places where a flammable gas or material is used or stored.
  * Places where the ambient temperature is extremely high (40ºC or higher) or extremely low (0ºC or lower).

Prohibited

- **Do not drain the liquid in the site.**
  The liquid discharged out of the pump, including a hazardous chemical liquid, must be drained into a special container. Never drain such liquid directly onto the floor in or near the operation site.

Prohibited

- **Disposal of used pump.**
  Disposal of used or damaged pumps must be done in accordance with the relevant local laws and regulations. (Consult a licensed industrial waste products disposing company.)

- **Electromagnetic precautions.**
  This product is not protected against an electromagnetic field. Take appropriate measures as necessary.

2. Inspection and Unpacking

For safe use and correct handling of the pump, confirm the application purpose and performance limits of the pump as well as the dangerous aspects of the operation before using the pump.

[1] Do the model of the pump, discharge capacity, discharge pressure, voltage, and other items marked on the nameplate represent what you ordered?

[2] Has the product been damaged or nuts and bolts been loosened during delivery? Please examine visually or by touch.

***Contact your dealer if you have any questions or if you have found any discrepancy in the contents of the delivered package.**

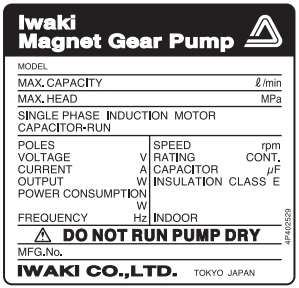

With AC motor

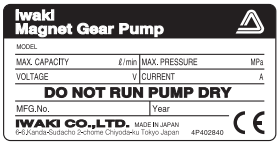

With DC motor

3. Principle of Operation

The Iwaki Magnet Gear Pump comprises a pair of gears driven by a magnet coupling and casing in which the gears are fitted exactly. (Fig. A)

Liquid introduced from the IN side feeds into the grooves between the teeth of the gears and is transferred to the OUT side by rotation of the gears. (Fig. B)

Then, the liquid is forced out of the grooves between the gear teeth in engagement. (Fig. C)

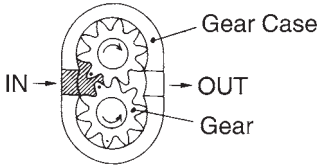

FigA

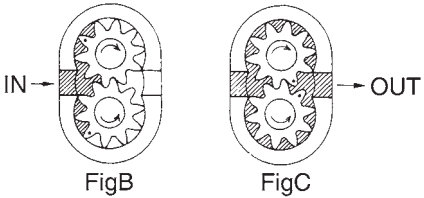

FigB FigC

4. Pump Identification Codes

MDG - R 2 R V A 230 - 01

(1) (2) (3) (4) (5) (6) (7)

(1) Pump model

(2) Nominal discharge
2:0.7ml/rev

(3) Liquid temperature
R: 0~50deg.C
B: 0~95deg.C

(4) Relief valve
No code: without relief valve
V: with relief valve

(5) Connection
A: Rc 1/8
B: 1/8 NPT
C: G 1/4

(6) Line voltage
100: AC100V
115: AC115V
230: AC220~240V
24: DC24V
24H: DC24V

(7) Non-standard specification code
01~99: Non-standard
No code: Standard

4-1. Specification

50/60Hz

Model	Max. discharge capacity (l/min)	Max. discharge pressure (Mpa)	Attainable vacuum (Kpa)	Rated speed (rpm)	Motor specification		Mass (kgf)
					Rated voltage (V)	Rated current (A)	
MDG-R2RV( )100	1.8/2.1	0.3	5.33	2600/3200	AC100	0.5/0.5	2.1
MDG-R2RV( )115					AC115	0.45/0.45	
MDG-R2RV( )230					AC220-240	0.25/0.26	
MDG-R2BV( )100	1.6/1.9				AC100	0.5/0.5	
MDG-R2BV( )115					AC115	0.45/0.45	
MDG-R2BV( )230					AC220-240	0.25/0.26	
MDG-R2B( )100					AC100	0.5/0.5	
MDG-R2B( )115					AC115	0.45/0.45	
MDG-R2B( )230					AC220-240	0.25/0.26	
MDG-R2B( )24	1.7	0.15		2800	DC24	1.0	1.1
MDG-R2RV( )24H	1.8	0.3		2000		1.2	
MDG-R2B( )24H	1.7						

Note 1. The above performance is based on operation with clean water at 25deg.C.
(The max discharge capacity changes depending on the temperature of the liquid used. Further information is available on request.)
2. The max allowable liquid viscosity is 50mPa•s for the pumps with an AC motor and 10mPa•s for the pumps with a DC motor.
3. The allowable ambient temperature is 0-40deg.C.
4. The MDG-R2( )V pump is equipped with a built-in relief valve.
5. Maximum operating noise is 55dB or below.
(0.5m away from the front of a pump, A scale)

5. External Dimensions

With AC motor

MDG-R2B( )100 type

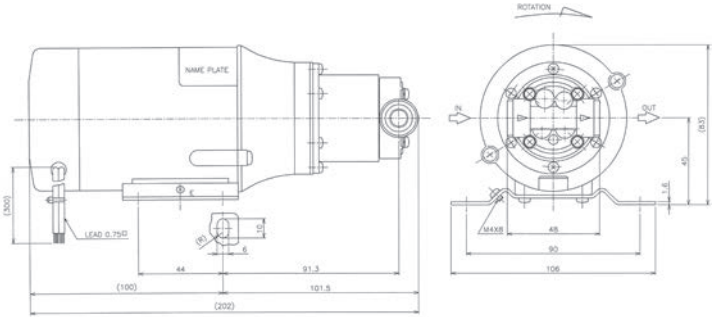

MDG-R2B( )115 type

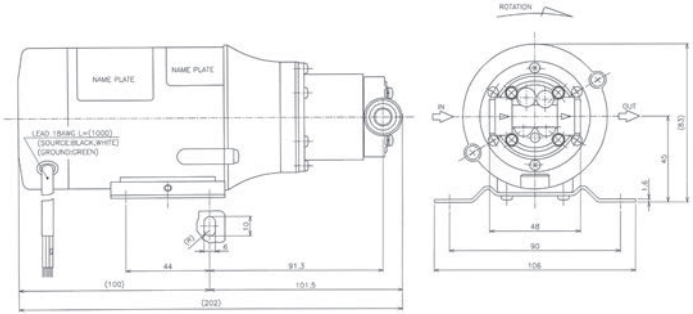

MDG-R2BV( )100 type/MDG-R2RV( )100 type

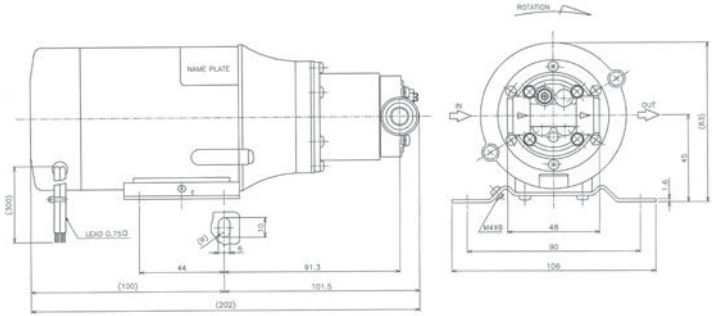

MDG-R2BV( )115 type/MDG-R2RV( )115 type

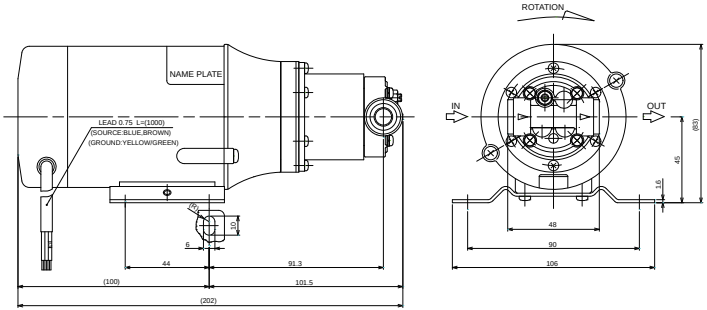

MDG-R2B( )230 type

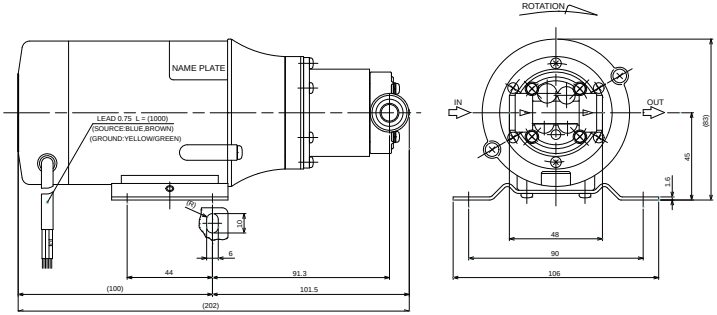

With DC motor
MDG-R2B( )24 type/MDG-R2B( )24H type

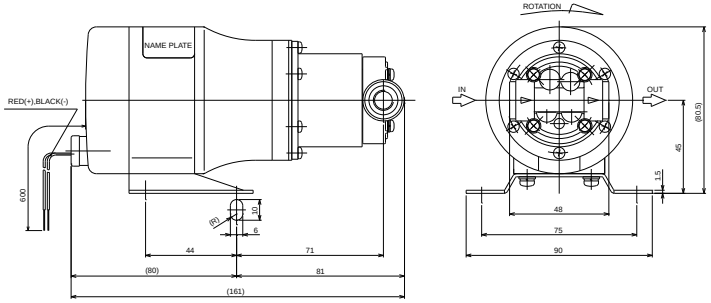

MDG-R2BV( )230 type/MDG-R2RV( )230 type

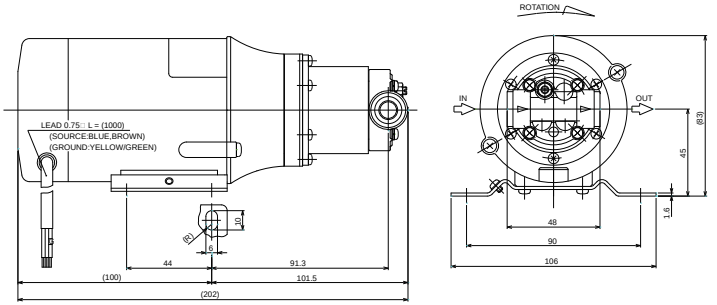

MDG-R2RV( )24H type

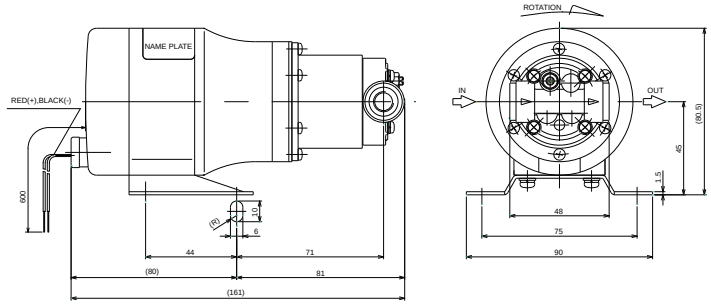

6. Standard Performance Curve

MDG-R2RV( )type (with AC motor)

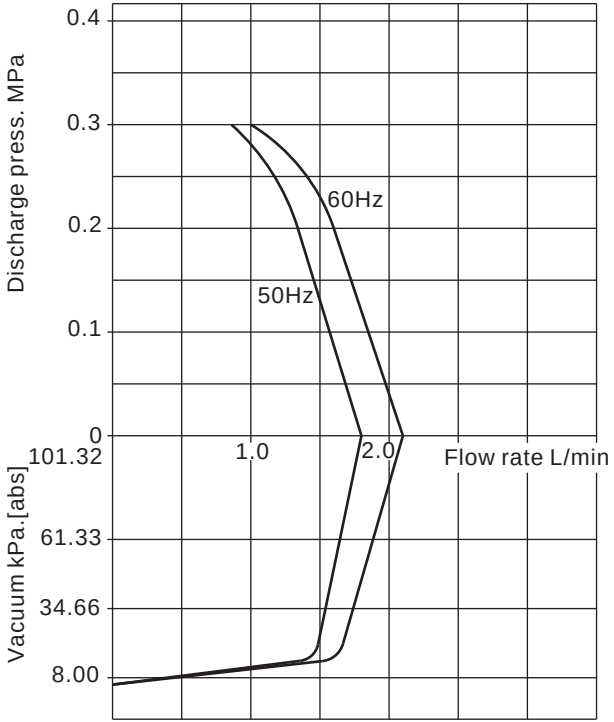

MDG-R2BV( )type (with AC motor)
MDG-R2B( )type (with AC motor)

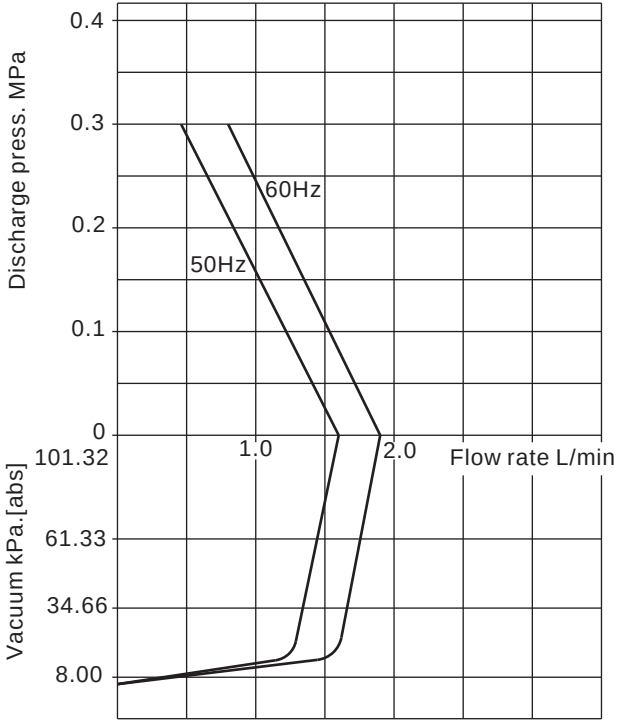

MDG-R2B( )24 (with DC motor)

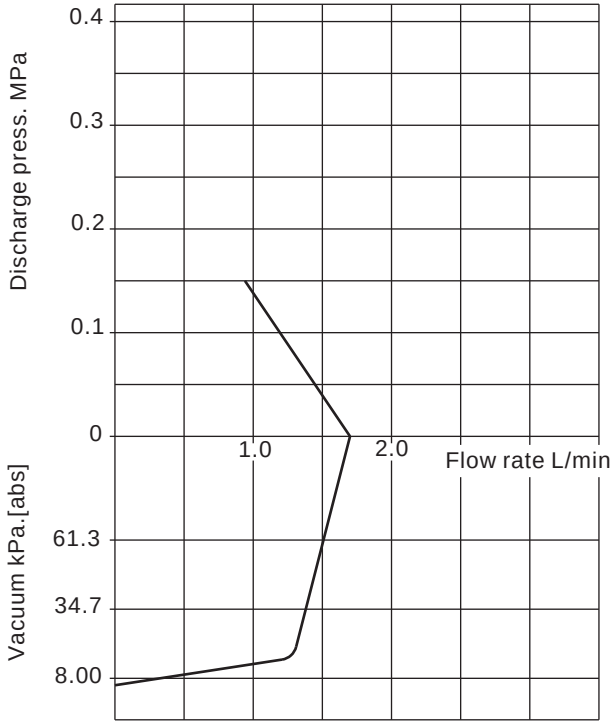

MDG-R2RV( )24H (with DC motor)

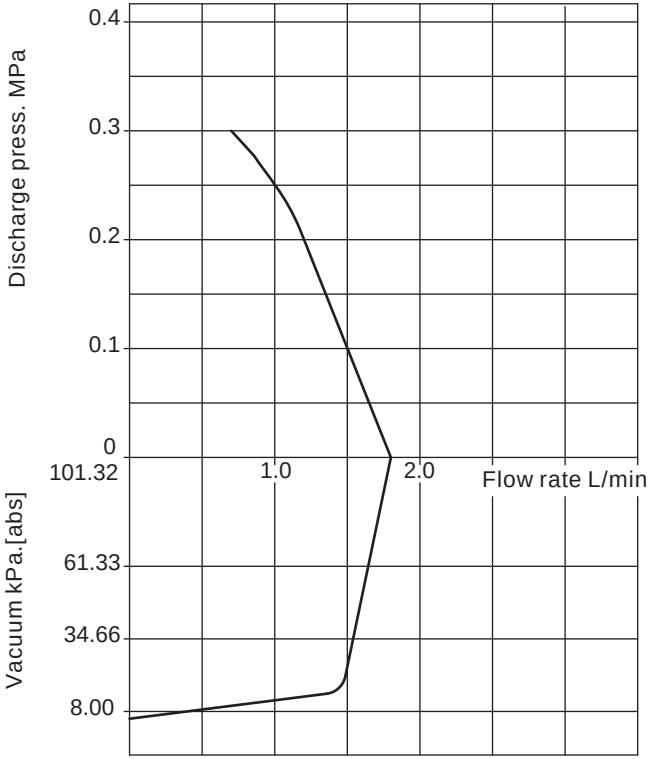

MDG-R2B( )24H (with DC motor)

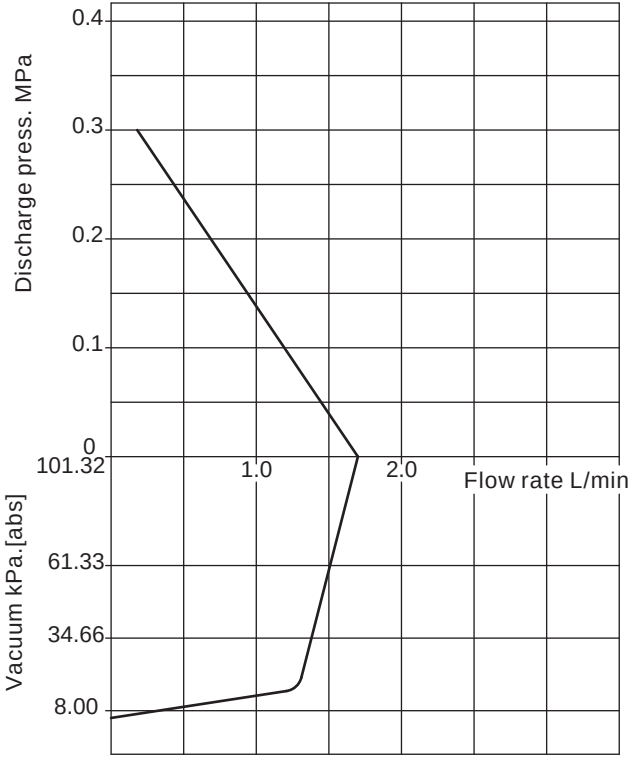

7. Descriptions of Parts

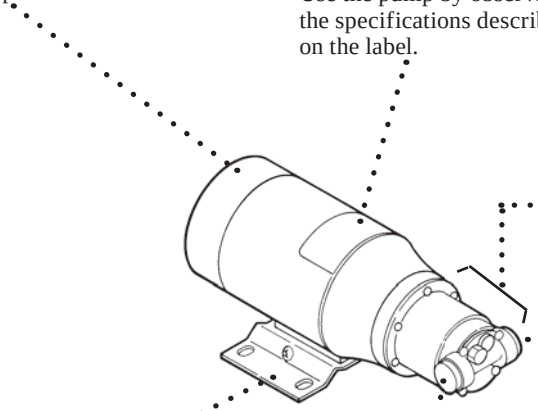

Motor (Driving unit)
Install the motor in a dry place free from water splashes.

"Specifications" label
Use the pump by observing the specifications described on the label.

Pump unit (Liquid circulating unit)
The pump is not self-priming type. Before operating the pump, be sure to fill the pump with liquid.

Discharge port

Base
Be sure to anchor the base onto the floor.

Suction port

MDG-R2( )V type
Relief valve is built in.
Refer to page 20.

8. Name of Parts

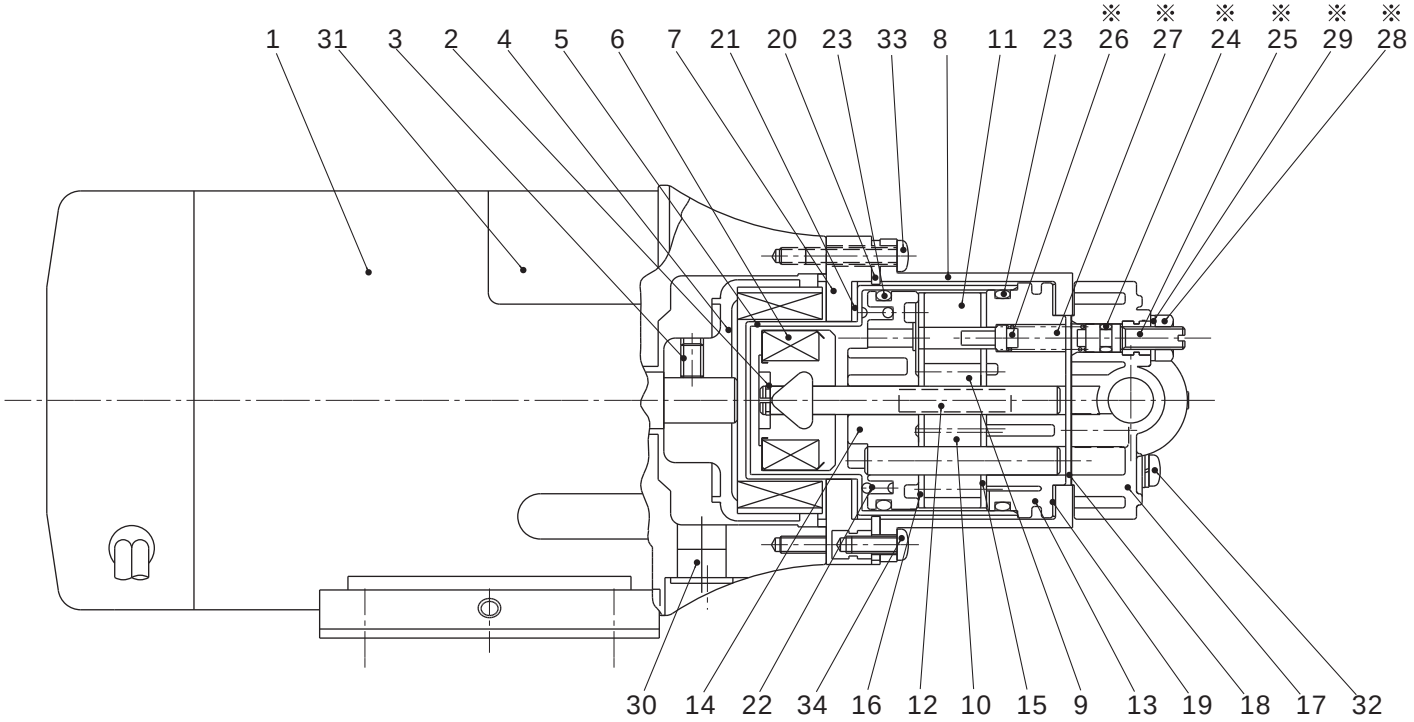

This figure shows MDG-R2( )V type.

- MDG-R2RV( )type
- MDG-R2B( )type
- MDG-R2BV( )type

No.	Parts Name	Q'ty	Material	Remarks
1	Motor	1		
2	Stop Ring	1	SUS316-WPA	
3	Screw	1	SNCM	M4×6
4	Drive Magnet	1	FERRITE, ADC-12	
5	Rear Casing	1	SUS316 or SUS316L	
6	Driven Magnet	1	FERRITE, GFRPPS, SUS316 or SUS316L	
7	Mounting Plate	1	GFRPPS	
8	Bracket	1	SUS304	
9	Drive Gear	1	PPS, SUS316	
10	Driven Gear	1	PPS, SUS316	
11	Gear Case	1	SUS316	
12	Parallel Pin	2	SUS316	
13	Front Bearing	1	(CF+PTFE) PPS	
14	Rear Bearing	1	(CF+PTFE) PPS	
15	Front Plate	1	SUS316	
16	Rear Plate	1	SUS316	
17	Pump Head	1	GFRPPS	
18	Gasket A	1	FKM	
19	Gasket B	1	FKM	
20	Packing B	1	EPDM	

No.	Parts Name	Q'ty	Material	Remarks
21	Packing C	1	EPDM	
22	Retaining Spring	1	SUS316-WPA	
23	O Ring	2	FKM	S36
24	O Ring	1	FKM	S3 ※
25	Adjusting Screw	1	SUS316	※
26	Relief Valve	1	(CF+PTFE) PPS	※
27	Relief ValveSpring	1	SUS316-WPA	※
28	Nut	1	STNLS STL	M4 ※
29	Plain Washer	1	STNLS STL	M4 ※
30	Cap	1	PE	G12.2
31	Nameplate	1	PET	
32	Screw	4	STNLS STL	M3×20 SW, PW
33	Screw	3	STNLS STL	M3×16
34	Screw	3	STNLS STL	M3×8

※ For MDG-R2( )V type (with Relief valve) only

9 Handling Instructions

■ Handling Instructions

- Handle the pump carefully. A strong impact caused by dropping the pump on the floor, striking it, etc., may result in faulty performance or damage to the pump.
- The pump is not self-priming type. Before operating the pump, be sure to fill the pump with liquid by operating priming.

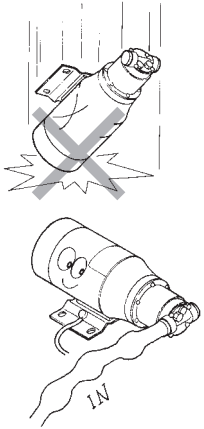

⚠ Caution!

- Do not operate the pump dry or with the discharge or suction side closed. If this is done, the gears and bearings will be worn out. Particularly, if the pump is operated with the discharge side closed, the discharge pressure will be increased and the relief valve will be activated. This will cause the liquid to circulate in the pump chamber. If this happens the temperature will rise rapidly, causing abnormal wear, seizure, etc., between contacting parts. Ex

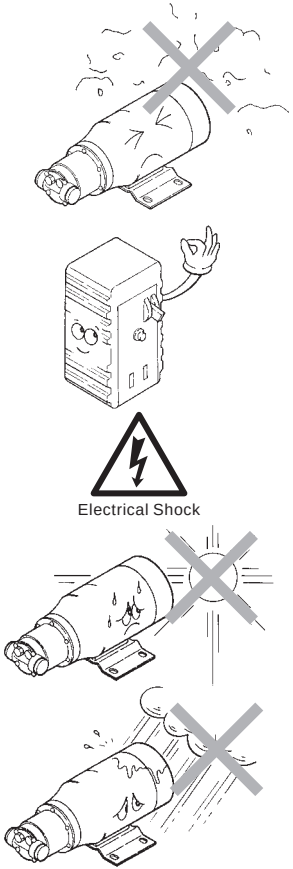

- The pump structure is not designed to be dust-proof or water-proof. Try not to wet or dampen the motor unit.
- For the prevention of electric shock accident, be sure to purchase an optional earth leakage breaker and install it in the system.
- Grounding must be set with the use of a grounding wire. For the prevention of electric shock, it is recommended that an earth leakage breaker also be installed. Ex
- Do not cover the motor unit tightly with a cover, etc. Avoid operating the pump at an ambient temperature above 40ºC. The relative humidity should be below 90%. Do not splash water on the motor. This may cause an electrical short or burning.

- Since there are powerful magnets inside the pump, any liquid containing powder of iron, nickel, etc. cannot be used. Also, the pump cannot be used for the transfer of slurry liquid or liquid which begins to crystallize when stationary.

- To ensure safety, do not place any inflammable material or other dangerous substance near the pump.

- The pump motor is not designed to be explosion-proof. Do not operate the pump in the places where filled with or likely to be filled with explosive atmosphere.

- The power cable cannot be replaced.
  When the power cable is destroyed or damaged, sometimes as a result of dropping it on the floor or the like, do not operate the pump. Otherwise, the pump itself may be damaged.

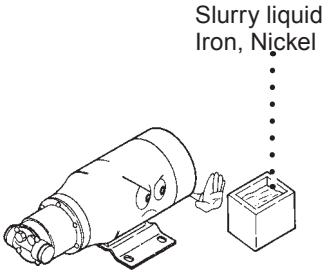

Prohibited

Prohibited

Prohibited

- Cleaning of the pump
  Do not use benzine, alcohol, thinner or the like for cleaning the pump. These liquids may cause discoloring or peeling off of the coat.

- Handling of a damaged pump
  Do not operate a damaged pump. A damaged pump causes electricity leakage or electric shock accident.

- Do not touch the pump directly
  The surface temperature of the motor or the pump may be extremely high during system operation.
  Do not touch directly or place any items near the pump which are easily deformed.

10 Installation, Piping and Wiring

⚠**CAUTION!**
When any abnormality or irregularity is noticed, stop the pump immediately and restart it from the first step.

10-1. Installation

(1) Choose a place where ambient temperature will not exceed 40ºC and ambient humidity of 90%RH. Allow sufficient space around the pump for easy access and maintenance. Do not install the pump out of outdoors.

(2) Install the pump in a position lower than the surface of the liquid in the tank on the suction side, to prevent dry running (flooded suction method).
If it is necessary to install an *R* type pump in a position in which the inlet of the pump remains higher than the liquid surface (a suction lift), refer to the illustrations on the right. In this position, the pump does not suck unless the pump chamber is wet. (The MDG-R2B type pumps do not function on a suction lift.)

[Flooded suction method]

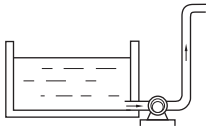

[Priming method]
(In case the pump chamber is wet)

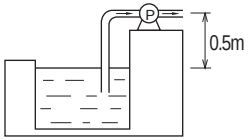

In case there is no liquid in the suction piping.
(This is not allowed for the B type.)

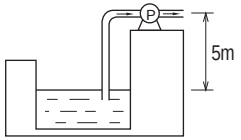

In case there is liquid inside the suction piping.

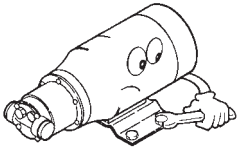

(3) Use M5 machine screws for fitting the pump. If the floor on which the pump is installed is resonant and causes a loud noise, fix the pump with rubber mountings

(Side view of hose)

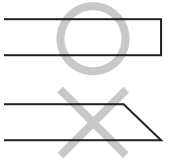

(4) Preparation of hoses
Cut the ends of hoses flat before starting pump installation.

(5) Do not install the pump vertically.
This cause damage of pump.

10-2. Piping

(1) In order to reduce the friction resistance of liquid, the piping should be as short and with as few bends as possible.

(2) The inlet and outlet joints of the pump should be completely sealed with sealing tape, etc., to prevent them from sucking air. If the sealing is incomplete on the suction side, in particular, air is sucked in and the performance of the pump is lowered.

Joint size
Refer to "Identification Code."

(3) When screwing the joint to the pump, hold the pump body rather than the motor by hand, to avoid applying excessive force on the motor and pump attachment section. For screwing the joint, the fastening torque shall be 0.49 N•m or lower.

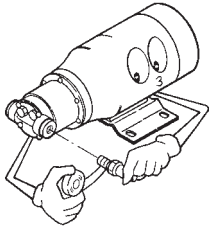

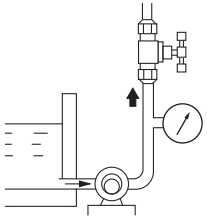

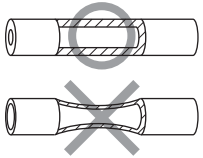

(4) A pressure gauge must be attached on the discharge piping to ease the pressure setting of the relief valve. This attachment also helps in the early detection of pump abnormality.

(5) For connection, use a thick hose which can withstand pump pressure. Since the hose on the suction side, in particular, tends to be crushed by sucking force, the use of a Teflon® hose or something similar is recommended. (When handling hot liquid, special care should be taken.)

10-3. Wiring

The power source handling during wiring work must be done by a licensed electric specialist only. Iwaki will not be responsible for any accident or mechanical damage if such an accident or damage results from the user's failure to observe the instructions above. For more information on wiring by a specialist, contact your dealer.

■ Before wiring

[1] Be sure to confirm before wiring that the main power supply is turned off (power supply is disconnected).

[2] Wiring shall be done in accordance with the local electric work regulations. (Use high-quality wiring elements and carry out wiring in accordance with the technical standards of electrical installation and related interior wiring rules.

[3] Use the power source voltage indicated on the "Specifications" label.

[4] The pump is not provided with an ON/OFF switch. The pump starts operation when power is supplied by connecting the power cable of the pump with the power source.

[5] Make sure to include a ground wire in the wiring. Select a well-ventilated place for pump installation. The pump must not be allowed to become wet or damp with splashed water. Ex

[6] If the pump is installed with an earth leakage breaker and the breaker is activated, eliminate the cause of the breaker activation first, before resetting the condition. When checking the pump for the said cause, be sure to turn off the power supply.

⚠ Wiring diagram

- AC115V

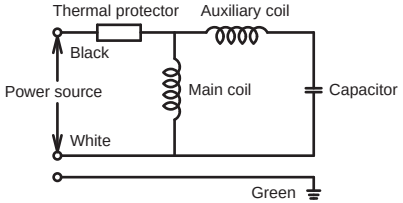

- AC220~240V

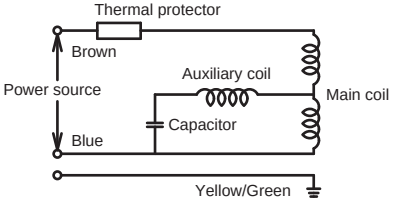

[7] For the MDG-R2B_24/R2___24H

a. This product is not protected against an electromagnetic field. Take appropriate measures as necessary.

b. After wiring work, check that the system is free from the inductive noise at start-up.

c. The drive circuit generates noise because of its high-speed switching. Check if peripheral devices are not affected by the noise.

d. Note that the motor fails if the power is connected with reverse polarity.

■ Rated Electric Current Value · Starting Current Value

50/60Hz

Model of pump	Voltage (V)	Rated current (A)	Starting current (A)
MDG-R2RV( )100	AC100	0.5/0.5	1.10/1.08
MDG-R2BV( )100			
MDG-R2B( )100			
MDG-R2RV( )115	AC115	0.45/0.45	0.92/0.90
MDG-R2BV( )115			
MDG-R2B( )115			
MDG-R2RV( )230	AC220~240	0.25/0.26	0.49/0.48
MDG-R2BV( )230			
MDG-R2B( )230			
MDG-R2B( )24	DC24	1.0	5
MDG-R2RV( )24H		1.2	
MDG-R2B( )24H			

Note: If DC24V motor is locked, a fuse built in motor melts. In this case the motor should be replaced by new one because the fuse can not be replaced.

11. Operation

11-1. Operation

After pump installation, piping, and wiring, follow the start-up procedure described below.

⚠ CAUTION!

Never operate the pump dry or operate the pump with the discharge and/or suction port closed (with the valve closed). Such an operation damages the pump. Ex

No.	Item	Remarks
1	Confirmation of piping, wiring, and voltage	● Confirm piping and electrical wiring, referring to descriptions in piping and wiring sections. ● Confirm that line voltage is appropriate, referring to nameplate.
2	Confirmation of valves	● Valves on suction side and discharge side should be fully opened.
3	Confirmation of liquid in pump	● When pump is used by priming method, prime pump sufficiently.
4	Starting up	● After confirming items 1~3 above, turn ON pump power supply, then check whether liquid is being fed smoothly. If not, immediately turn off power supply and eliminate cause of problem, referring to "Causes of Trouble and Troubleshooting" section on page 21.
5	Operation	● Adjust valve gradually to obtain specified values of discharge, discharge pressure, or vacuum. ● Do not open/close suction port and discharge port suddenly. This may lead to disconnection of magnet coupling, so that gears cannot rotate. If this happens, turn off power supply. As motor stops, normal coupling will be restored. ● Do not operate pump with discharge valve and/or suction valve completely or almost completely closed. Set operating pressure to at least 0.1MPa lower than set value of relief valve pressure in case of MDG-R2( )V type. Ex
6	During operation	● Be careful not to allow any foreign matter to enter pump. Foreign matter may cause gear locking or abnormal wear of gear. ● If earth leakage breaker is actuated, reset it only after carefully examining cause of actuation. Be sure to turn off power supply before examining cause.

11-2. Relief valve set up

The MDG-R2( )V model is equipped with a built-in relief valve. The pressure set upon shipping is 0.4MPa. The pressure value can be adjusted within the range of approximately 0.3~0.4MPa. Prior to resetting the pressure, please contact us and follow the procedure described below.

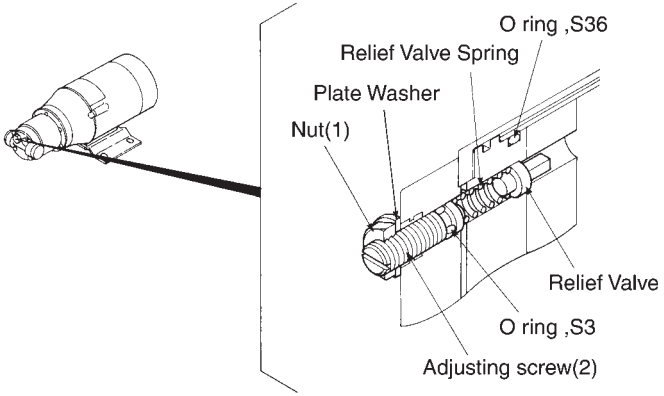

[1] Loosen the clamp nut (1) with a spanner (M4).

[2] Adjust the pressure for the desired value by turning the set pressure adjustment screw (2) with a flat head driver (Watch the pressure gauge installed on the discharge piping in advance for reaching the target value.)

[3] Fasten the clamp nut (1) tightly with the spanner (M4). Be sure to check for liquid leakage after resetting the relief valve.

(Note) The pump performance varies with the relief valve pressure set point.

12. Causes of Trouble and Troubleshooting

Problem	Cause	Countermeasure
Motor stops while in operation.	● Wiring contact is bad. ● Thermal protector is activated by overload. ● Earth leakage breaker is activated by leak.	○ Examine and repair defective part. ○ Lower viscosity of liquid or discharge pressure. ○ Examine and repair or replace.
Liquid cannot be pumped up, or capacity is insufficient.	● Dry running without liquid on suction side Ex ● Air enters through suction side. ● Suction port is crushed. ● Pressure in inlet portion is as low as or lower than vapor pressure of the liquid. ● Liquid viscosity is too high. ● Valve is closed. Ex ● Piping resistance is too high. ● Gear is worn out.	○ Supply liquid or open suction side valve. ○ Examine suction side piping and repair. ○ Replace with a new, uncrushable pipe. ○ Lower liquid temperature or piping resistance. ○ Lower viscosity. ○ Open valve. ○ Adjust piping. ○ Replace with new gear.
Magnet coupling disconnects.	● Dry running without liquid on suction side. Ex ● Lock due to gear swelled ● Locking due to expanded gear ● Foreign matter sticks to gear ● Gear is damaged. ● Magnet capsule hits rear casing. ● Valve is closed. Ex ● Piping resistance is too high. ● Pump selection on chemical(corrosion) resistance is wrong.	○ Supply liquid or open suction side valve. ○ Select a correct pump material. ○ Lower liquid temperature. ○ Disassemble and remove foreign matter. ○ Replace with new gear case unit. ○ Disassemble and repair or replace parts. ○ Open valve. ○ Adjust piping. ○ Select a correct pump material.

Problem	Cause	Countermeasure
Motor cannot be started.	● Plug is out of socket. ● Contact is bad or there is a break in wiring. ● Motor is malfunctioning, wire in motor is broken. ● Earth leakage breaker is activated by leak. ● Breaker is activated due to lack in power capacity.	○ Insert plug into socket. ○ Examine and repair defective part. ○ Repair or replace. ○ Examine and repair or replace. ○ Increase capacity.
Too much noise or vibration	● Dry running without liquid on suction side Ex ● Foreign matter sticks to gear. ● Gear is damaged. ● Magnet capsule hits rear casing. ● Gear is worn out.	○ Supply liquid or open suction side valve. ○ Disassemble and remove foreign matter. ○ Replace with new gear case unit. ○ Disassemble and repair or replace parts. ○ Replace with new gear.
Liquid leaks.	● O ring is damaged. ● Bolt is loosened. ● Corrosion resistance is unsuitable.	○ Replace with new O ring. ○ Fasten tightly again. ○ Select correct pump material.
Self-priming cannot be made	● Dry running without liquid on suction side Ex ● Air enters through suction side. ● Suction port is crushed. ● Inside of pump is dry. ● Pressure in inlet portion is as low as or lower than vapor pressure of the liquid. ● Gear is worn out. ● Suction height is too high.	○ Supply liquid or open suction side valve. ○ Examine suction side piping and repair. ○ Replace with new, uncrushable pipe. ○ Supply liquid through discharge side or suction side. ○ Lower liquid temperature or piping resistance. ○ Replace with new gear. ○ Lower the suction height.

13. Maintenance and Inspection

Follow the contents of this instruction manual when carrying out the maintenance, inspection, disassembling, and assembling of the pump and/or related components. Never operate the pump out of the ranges specified in this instruction manual. Iwaki will not be responsible for any accident or mechanical damage if such an accident or damage results from the user's failure to observe the instruction above.

Wear protective gear

⚠Wear protectors.
When carrying out the maintenance, inspection, disassembling, and assembling of the pump and/or related components, always wear safety gloves, helmet, safety shoes, and the like.
If making access to a wet-end part of the pump in particular, never fail to wear protective goggles, protective headgear, mask, etc., depending on the type of the operation.

■ Maintenance and Inspection

No.	Check Point	Remarks	Check method
1	Is pump lifting liquid properly?	● Whether liquid is being transferred. ● Whether suction and discharge pressures are at normal levels.	● Flow meter or visual check. ● Collation with nameplate.
2	Is there abnormal noise or vibration? Ex	● If pump does not function normally, abnormal noise or vibration tends to be generated. ● Base on which pump is mounted sometimes becomes resonant to increase noise. If separation of pump from the base decreases noise, anti-vibration measure such as attaching anti-vibration rubber mounts to pump should be taken.	● Visual check and hearing check. ● Visual check and hearing check.
3	Is liquid leaking or air being sucked in from joints of pump?	● Clamp connections more tightly. ● If many air bubbles are found in discharged liquid, air is being sucked in. Examine piping and clamp connection more closely.	● Visual check.
4	Is temperature of pump unit surface, motor surface, etc., abnormally high?	● Pump unit surface temperature is same as that of liquid handled. ● Temperature of motor surface is within about 40deg. above ambient temperature. Sometimes it is too hot to touch, but it is normal if temperature is within this range.	● By touch or by thermometer.

■ Spare parts

For a long continuous operation of the pump system, spare parts must be replaced timely. The expendable parts in particular must be supplied at hand constantly. For details, contact your dealer.

No.	Parts	Parts cord	Q'ty	Replacement time
9	Drive gear	MDG0523	1	5000 hours
10	Driven gear	MDG0524	1	
13	Front bearing	MDG0529	1	
14	Rear bearing	MDG0530	1	
15	Front plate	MDG0531	1	
16	Rear plate	MDG0532	1	
18	Gasket A	MDG0533	1	Every maintenance interval
23	O ring	MDG0536	2	

■ Disassembling and Assembling

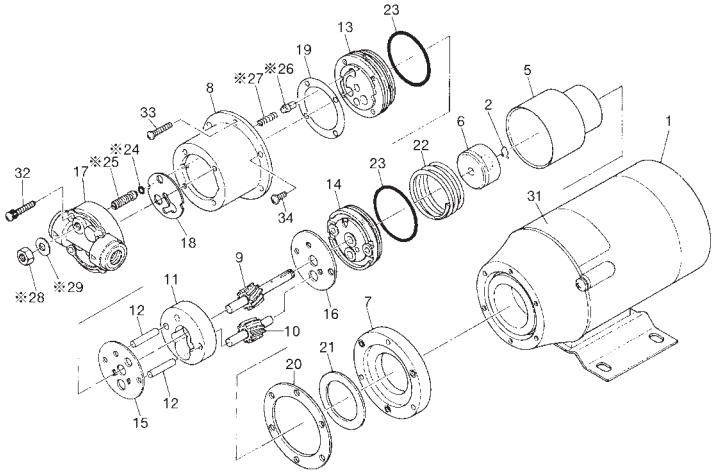

<Disassembling>

1. Remove the 3 machine screws (33) and detach the pump unit off the motor (1).
2. Remove the screw (32)with, spring washer , and plate washer to detach the pump head (17). In the case of MDG-R2( )V type, never disassemble the adjusting screw (25), O ring (24), nut (28), and plain washer (29). Touching these parts may change the set pressure of the relief valve.
3. Remove the gasket A (18), relief valve (26), and relief valve spring (27).
4. Remove the 3 screws(34) and detach the mounting plate (7), packing B (20), bracket (8), and gasket B (19) off the pump unit.
5. Remove the rear casing (5). Leave the packing C (21) on the rear case as it is. In this step, be careful with the liquid which may remain inside the rear casing.
6. Use tweezers or the like to detach the stop ring (2) and remove the retaining spring (22). (See the figure below)

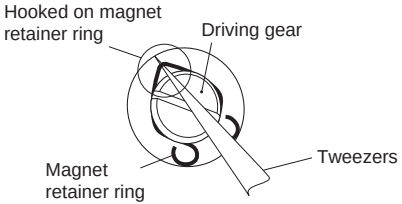

7. Detach the driven magnet (6) from the drive gear (9). Store the removed driven magnet in a place free of steel powder or dust.
8. Disassemble the rear bearing (14), rear plate (16), drive gear

   (9), driven gear (10), gear case (11), parallel pins (12), front plate (15), and front bearing (13) in the order described. Handle these parts carefully so as not to cause scratches on the surfaces. Store them in a dust-free place after cleaning them.

<Assembling>

1. Attach the O ring (23) to the front bearing (13) and the rear bearing (14) each. Apply silicone grease to the O ring beforehand.

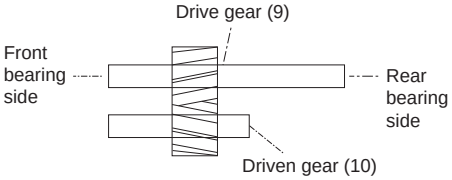

2. Attach the parallel pins (12) onto the front bearing (13). Then, assemble the front plate (15), gear case (11), drive gear (9), driven gear (10), rear plate (16), and rear bearing (14) in the order described. In this step, be careful to match the hole positions of the respective parts. In addition, be sure to insert the drive gear (9) and the driven gear (10) in the directions shown in the figure on the left.

· **How to mount parallel pins**

When you mount parallel pin on front bearing, face the V groove side to the front bearing. See illustration below.

⚠Caution

· Parallel pin put in reverse may cause lack of suction liquid resulting in failed discharge and damaged pump. Be sure to put V groove side to front bearing.

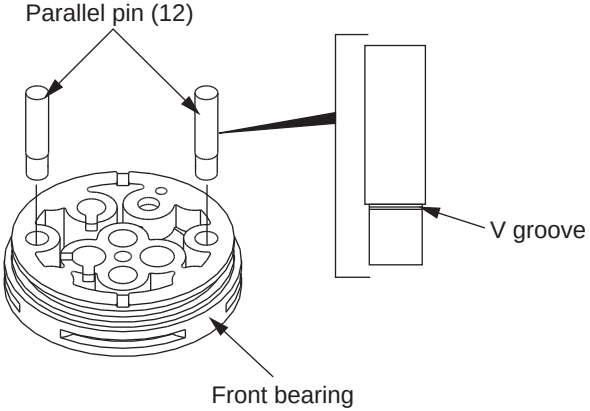

3. Insert the driven magnet(6) onto the drive gear (9) and attach the stop ring (2). Caulk the stop.
4. Attach the retaining spring (22) so that it is inserted in the groove of the rear bearing (14). Attach the rear casing (5) firmly over them.
5. Put the gasket B (19) on the front bearing (13) with the holes aligned exactly. Then, attach the bracket (8) to meet with the 2 grooves.

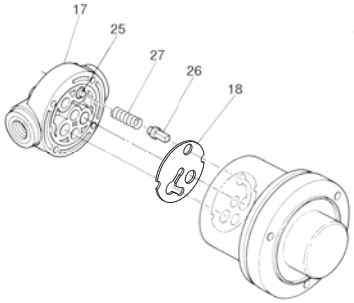

6. Insert the relief valve (26) and relief valve spring (27) into the front bearing (13). Then, attach the gasket A (18) and the pump head (17) by tightening the 4 screws (with P.W. and S.W.) (32). In this step, be careful with the positioning of the bracket, gasket A, and pump head. In the case of MDG-R2( ) V type only, make sure that the adjusting screw (25) and relief valve spring (27) are inserted in position. (See the figure on the left.)

7. Attach the packing B (20) and mounting plate (7) to the bracket (8) by tightening the 3 screws (34). (Note: Fastening torque of 0.6 N•m)

8. Mount 4 screws with P.W & S.W (32) on pump head (17) and tighten them. (Note: Fastening torque of 0.8 N•m)

· Screws tightening order

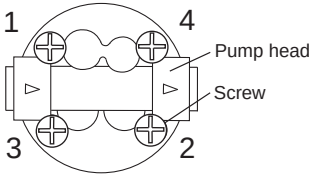

⚠ Caution

· When you mount pump head, do not tighten screws with more than specified tightening torque.
· Evenly tighten screws(32) in diagonal order.

9. Attach the assembled pump unit on the motor (1) and fasten the three screws (33).

( )Country codes

IWAKI PUMPS

IWAKI CO.,LTD. 6-6 Kanda-Sudacho 2-chome Chiyoda-ku Tokyo 101-8558 Japan
TEL:(81)3 3254 2935 FAX:3 3252 8892(http://www.iwakipumps.jp)

Australia	**IWAKI Pumps Australia Pty. Ltd.**	TEL : (61)2 9899 2411	FAX : 2 9899 2421	**Italy**	**IWAKI Europe GmbH, Italy Branch**	TEL : (39)0444 371115	FAX : 0444 335350
Austria	**IWAKI EUROPE GmbH**	TEL : (49)2154 92540	FAX : 2154 9254 48	**Korea**	**IWAKI Korea Co.,Ltd.**	TEL : (82)2 2630 4800	FAX : 2 2630 4801
Belgium	**IWAKI Belgium n.v.**	TEL : (32)1367 0200	FAX : 1367 2030	**Malaysia**	**IWAKIm Sdn. Bhd.**	TEL : (60)3 7803 8807	FAX : 3 7803 4800
China	**IWAKI Pumps (Shanghai) Co., Ltd.**	TEL : (86)21 6272 7502	FAX : 21 6272 6929	**Norway**	**IWAKI Norge AS**	TEL : (47)23 38 49 00	FAX : 23 38 49 01
China	**IWAKI Pumps (Guangdong) Co., Ltd.**	TEL : (86)750 3866228	FAX : 750 3866278	**Singapore**	**IWAKI Singapore Pte. Ltd.**	TEL : (65)6316 2028	FAX : 6316 3221
China	**GFTZ IWAKI Engineering & Trading (Guangzhou)**	TEL : (86)20 8435 0603	FAX : 20 8435 9181	**Spain**	**IWAKI Europe GmbH, Spain Branch**	TEL : (34)93 37 70 198	FAX : 93 47 40 991
China	**GFTZ IWAKI Engineering & Trading (Beijing)**	TEL : (86)10 6442 7713	FAX : 10 6442 7712	**Sweden**	**IWAKI Sverige AB**	TEL : (46)8 511 72900	FAX : 8 511 72922
Denmark	**IWAKI Nordic A/S**	TEL : (45)48 24 2345	FAX : 48 24 2346	**Switzerland**	**IP Service SA**	TEL : (41)26 674 9300	FAX : 26 674 9302
Finland	**IWAKI Suomi Oy**	TEL : (358)9 2745810	FAX : 9 2742715	**Taiwan**	**IWAKI Pumps Taiwan Co., Ltd.**	TEL : (886)2 8227 6900	FAX : 2 8227 6818
France	**IWAKI France S.A.**	TEL : (33)1 69 63 33 70	FAX : 1 64 49 92 73	**Taiwan**	**IWAKI Pumps Taiwan (Hsin-chu) Co., Ltd.**	TEL : (886)3 573 5797	FAX : (886)3 573 5798
Germany	**IWAKI EUROPE GmbH**	TEL : (49)2154 92540	FAX : 2154 9254 48	**Thailand**	**IWAKI (Thailand) Co.,Ltd.**	TEL : (66)2 322 2471	FAX : 2 322 2477
Holland	**IWAKI Europe GmbH, Netherlands Branch**	TEL : (31)74 2420011	FAX : 2154 9254 48	**U.K.**	**IWAKI Pumps (UK) LTD.**	TEL : (44)1743 231363	FAX : 1743 366507
Hong Kong	**IWAKI Pumps Co., Ltd.**	TEL : (852)2 607 1168	FAX : 2 607 1000	**U.S.A.**	**IWAKI AMERICA Inc.**	TEL : (1)508 429 1440	FAX : 508 429 1386
Indonesia	**IWAKI Singapore (Indonesia Branch)**	TEL : (62)21 690 6606	FAX : 21 690 6612	**Vietnam**	**IWAKI pumps Vietnam Co.,Ltd.**	TEL : (84)613 933456	FAX : 613 933399

T540-2 '15/04